SPECIFICATION FOR APPROVAL

Customer	:	
Customer Part No.	:	
Brightek Part No.	:	V52720W10WNZ1
Time	:	2020/04/03

Customer Comfirmation	Approval	Checkedy	Prepared By
	JJ.HE	CB.TAN	HH.YI

V52720W10WNZ1

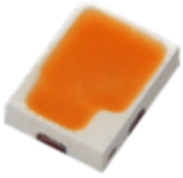

◆**Outline(L*W*H): 2.75*2.0*0.6 mm**

◆**High flux efficiency & Energy conservation**

◆**Good thermal dissipation & optical uniformity**

Table of Contents

Product Code Method----------3
Maximum Rating----------3
Typical Product Characteristics----------4
Range of Bins----------4
Color Coordinate Comparison----------5
Relative Spectral Power Distribution----------6
Typical Diagram Characteristics of Radiation----------6
Electronic-Optical Characteristics ----------7
Thermal Design for De-rating----------8
Dimensions ----------9
Reflow Profile----------10
Test Circuit and Handling Precautions----------11
Packing----------13
Precautions----------14
Test Items and Results of Reliability----------15

Features

- Forward current: ≦240mA
- Typical view angle 50% Iv: 120°
- RoHS2.0 and REACH-compliant
- Lens color: yellowish
- Qualified according to JEDEC moisturevity Level 2a
- ESD level 8kV(HBM)
- Reliability Test: AEC Q-102qualified

Applications

- Automotive electronics
- Others applications

■ Product Code Method

V5 - 2720 - W10 - W -N - Z1

① ② ③ ④ ⑤ ⑥

①	②	③	④	⑤	⑥
Process Type	Lead Frame Size	Dice wavelength	Cap Color	Spectral Condition Code	Flow Code
V5 : For Automotive	2720: 2.75* 2.0mm	Wxx: golden White	W: yellowish	N: 200mA	Z: Z:zener 1: no expression above meaning for company

■ Maximum Rating(Ta=25℃)

Characteristics	Symbol	Typical	Unit
DC Forward Current	I_F	240	mA
Pulse Forward Current*3	I_{PF}	800	mA
Reverse Voltage	V_R	5	V
Junction Temperature	T_J	150	°C
Operating Temperature Range	T_{OP}	-40-125	°C
Storage Temperature Range	T_{STG}	-40-125	°C
Soldering Temperature*4	T_{SD}	260	°C
Thermal Resistance Junction/ Solder Point	RTH_{J-S}	40	℃/W

Notes 1: There is no maximum or typical voltage parameter

2: For other ambient, limited setting of current will be depended on de-rating curves.

3: Duty 1/10, pulse width 0.1ms

4: The maximum of soldering time is 10 seconds in T_{SD}

■ Typical Product Characteristics(Ta=25℃)

Characteristics	Symbol	Min.	Typ.	Max.	Unit	Test condition
Forward Voltage	V_F	2.8	3.2	3.8	V	I_F=200mA
Luminous Intensity[2]	Φ	32	38	-	lm	I_F=200mA
Color Coordinate	x	-	0.57	-	-	I_F=200mA
	y	-	0.42	-	-	
Peak Wavelength	λp	-	613	-	nm	IF=200mA
Spectral Width 50%	Δλ	-	85	-	nm	IF=200mA
Reverse Current	I_R	-	-	10	μA	V_R= 5V
Viewing Angle	$2\theta_{1/2}$	-	120	-	deg	I_F=200mA

Notes: 1. Measurement errors:

Forward Voltage: ±0.1V, Luminous Intensity: ±10%Iv, Color Coordinate: ±0.005, Viewing Angle ($2\theta_{1/2}$) ±5%

2. Electrical-Optical Characteristics (Ta=25℃)

■ Range of Bins

1).Forward Voltage (I_F = 200mA)

Bin Code	Min. V_F(V)	Max. V_F(V)
K	2.8	3.0
L	3.0	3.2
M	3.2	3.4
N	3.4	3.6
O	3.6	3.8

2).Luminous Intensity (IF = 200mA)

Bin Code	Min. Φ(lm)	Max. Φ(lm)
18	32	38
19	38	44
20	44	50
21	50	58

■ Color Coordinate Comparison

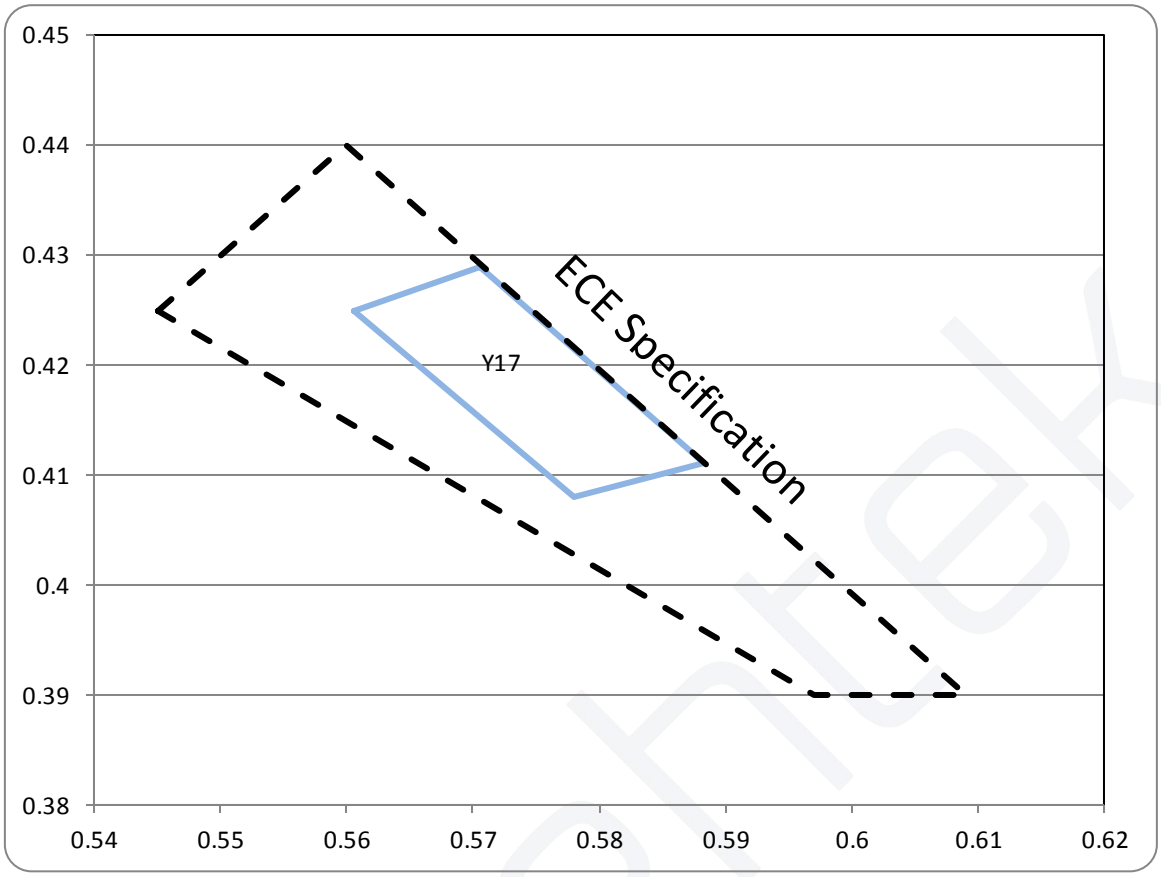

Color Rank

	X	Y	X	Y	X	Y	X	Y
Y17	0.5606	0.425	0.5705	0.4289	0.5883	0.4111	0.578	0.408

■ Relative Spectral Power Distribution

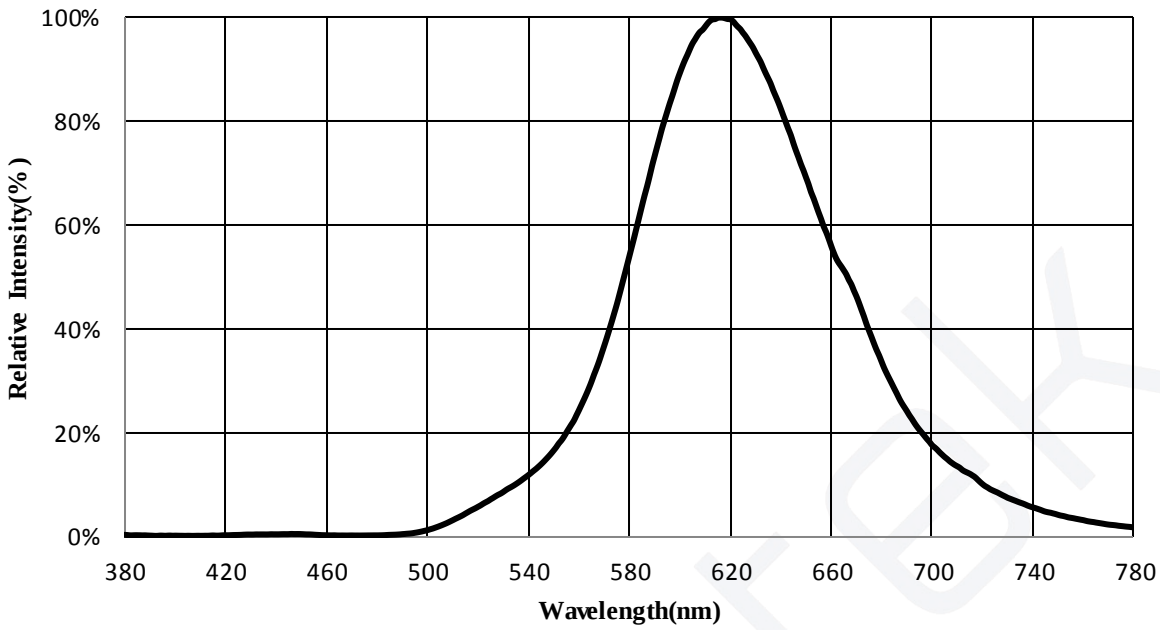

■ Typical Diagram Characteristics of Radiation

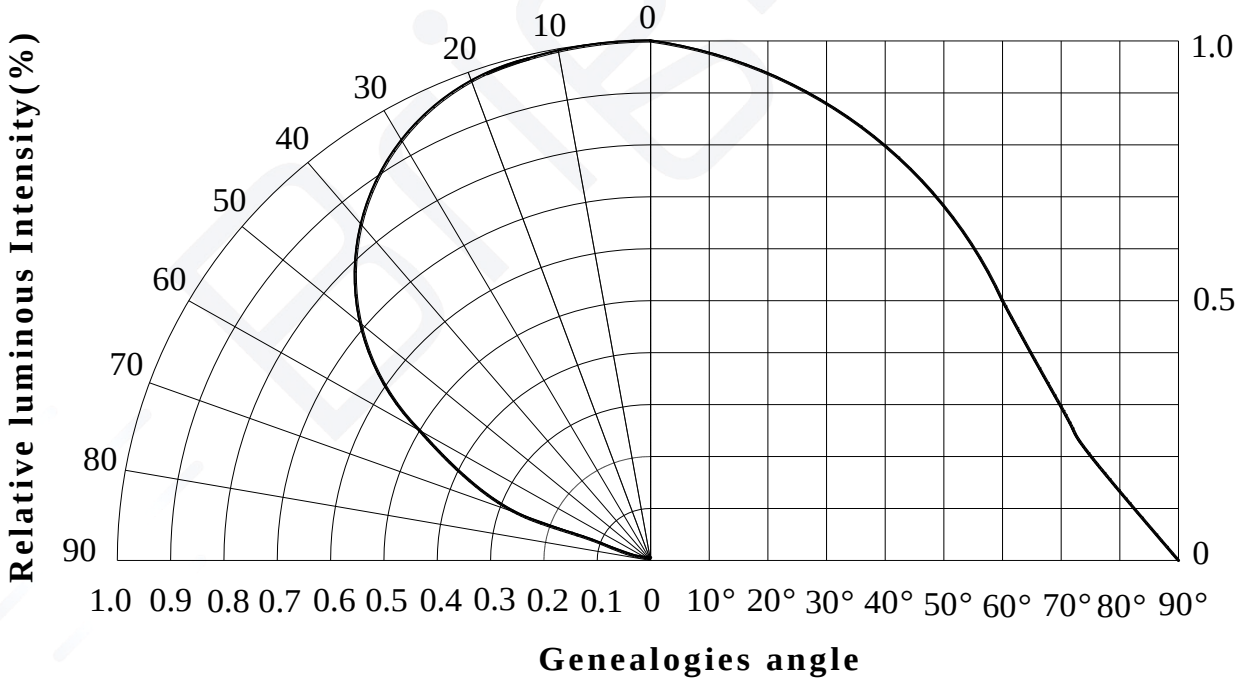

■ Electronic-Optical Characteristics

Forward Current vs. Forward Voltage

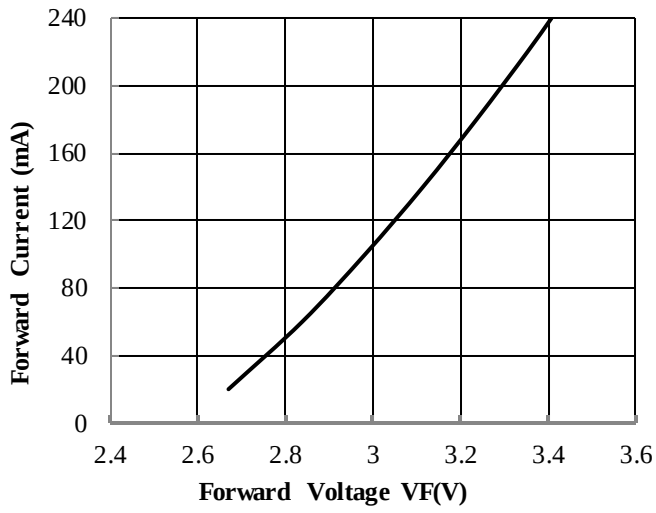

Forward Voltage vs. Solder Temperature

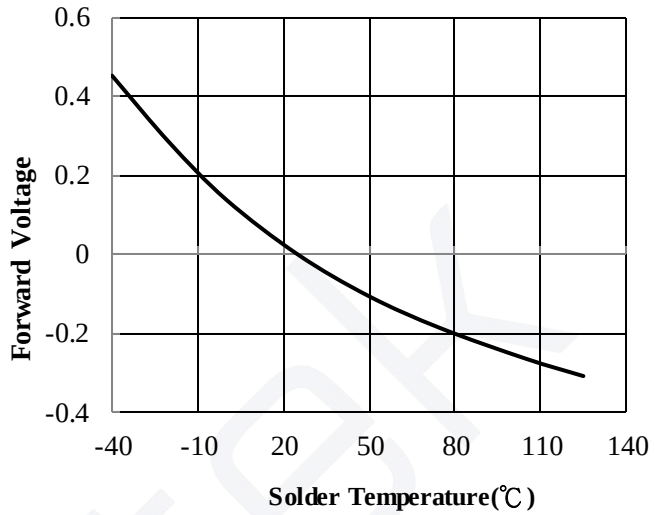

Relative Intensity vs. Forward Current

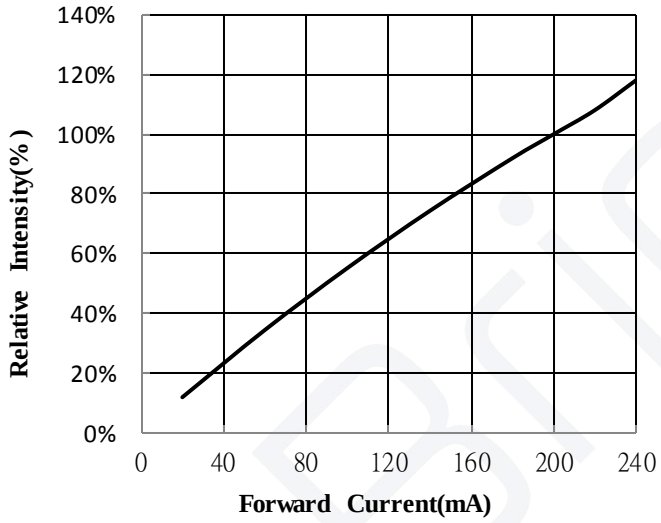

Relative Intensity vs. Solder Temperature

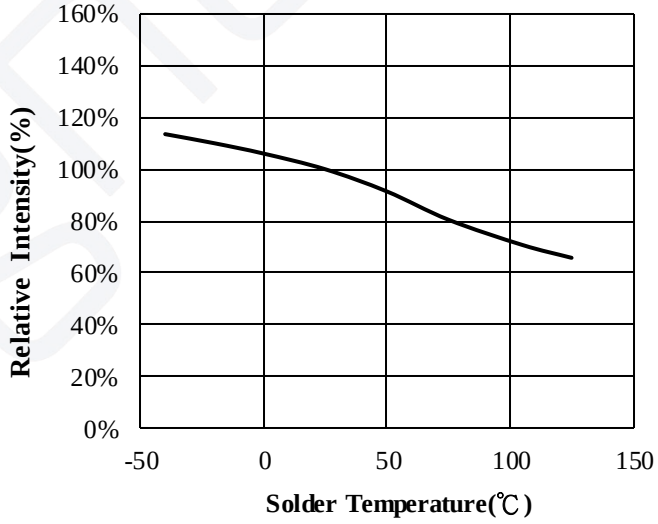

Chromaticity Coordinate vs. Forward Current

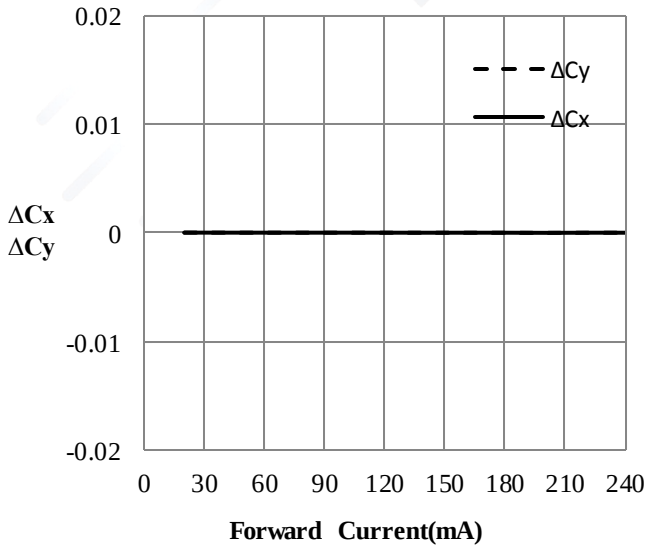

Chromaticity Coordinate vs. Solder Temperature

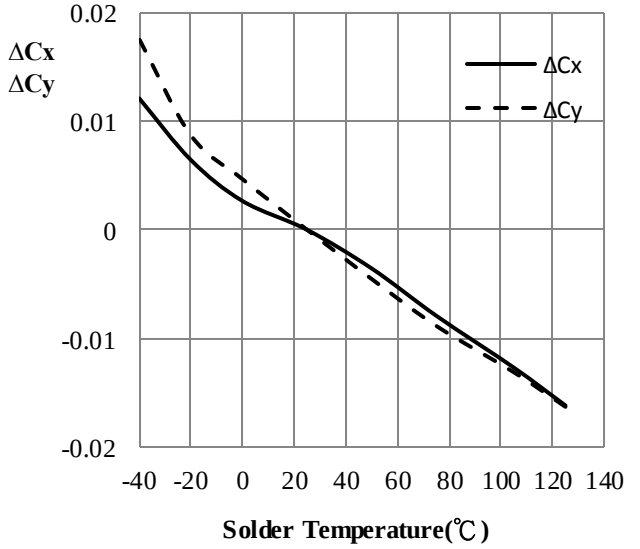

■ Thermal Design for De-rating

The maximum forward current is determined by the thermal resistance between the LED junction and solder point. It is crucial for the end product to be designed in a manner that minimizes the thermal resistance from the solder point to ambient in order to optimize lamp life and optical characteristics.

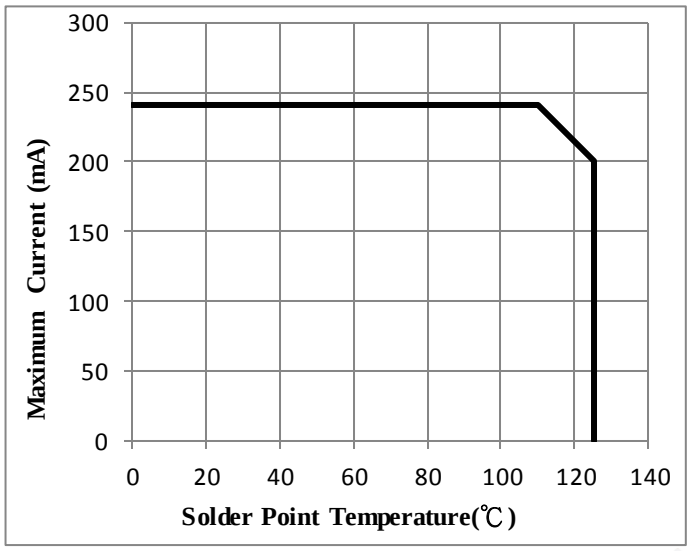

■ Dimensions

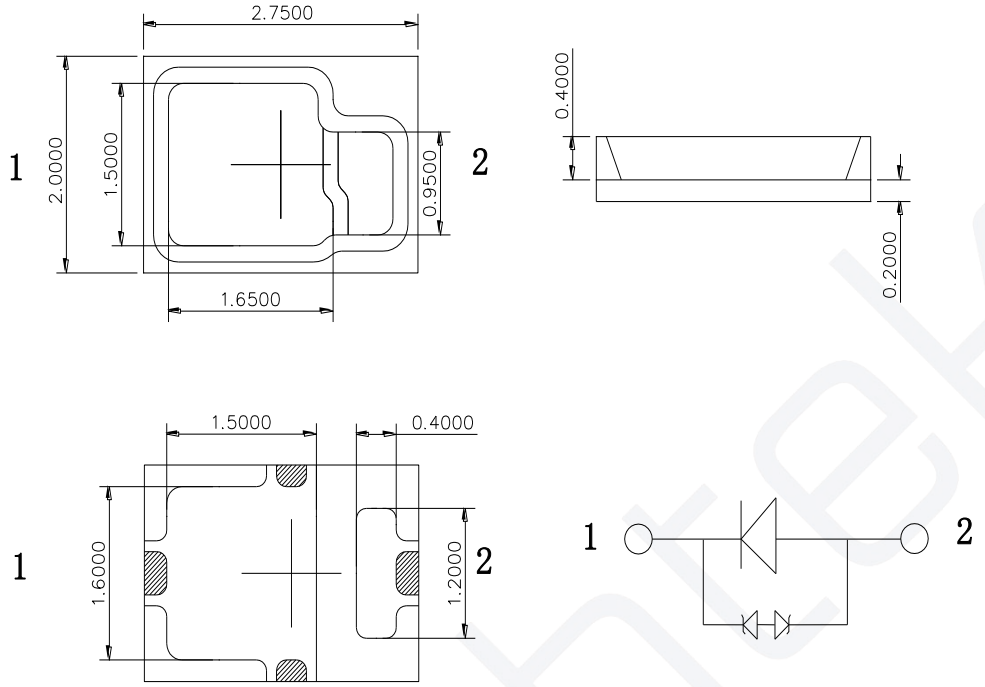

Recommended Solder Pad

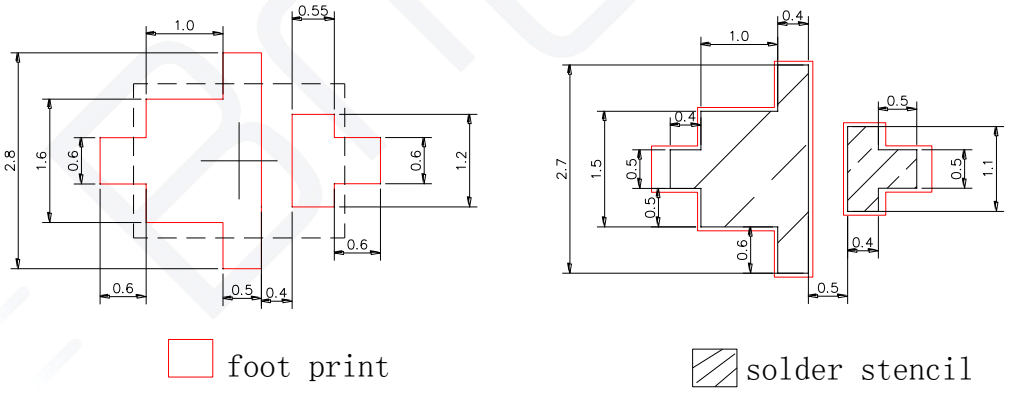

Notes: 1. All dimensions are in millimeters
2. Tolerance is ±0.1mm unless otherwise noted
3. Specifications are subject to change without notice.

■ Reflow Profile

SMT Reflow Soldering Profile

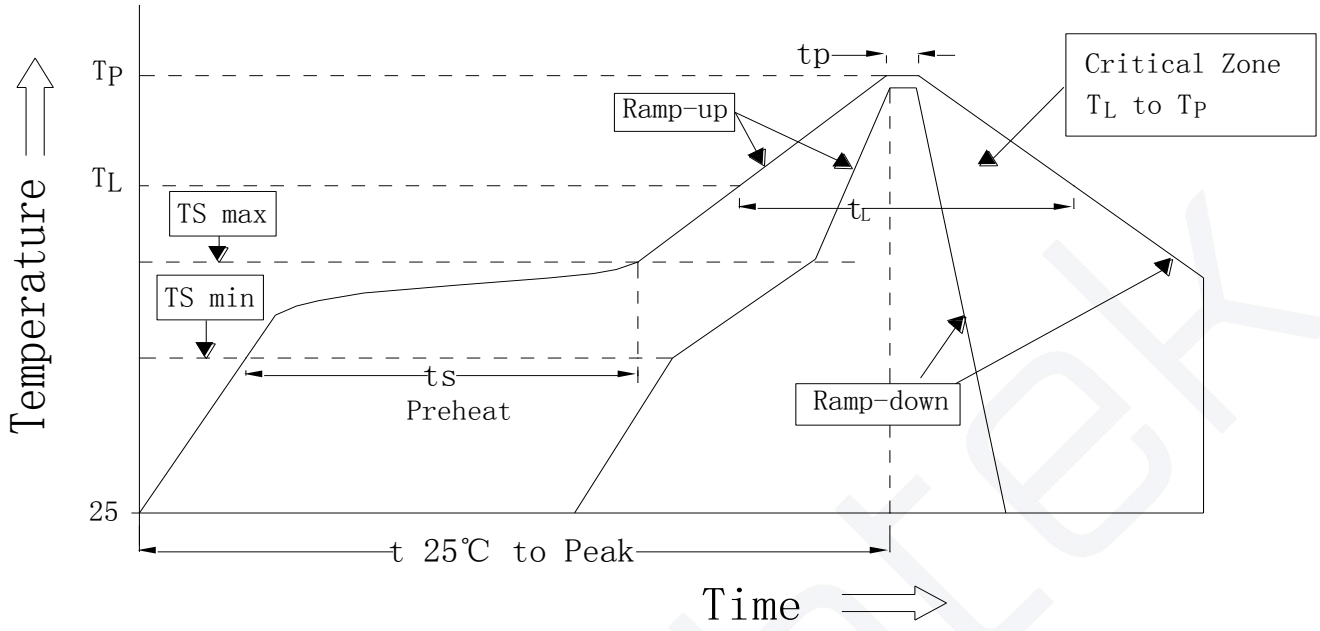

Profile Feature	Symbol	Pb-Free (SnAgCu) Assembly			Unit
		Min.	Recommendation	Max.	
Ramp-up rate to preheat (25℃ to 150℃)	-	-	2	3	K/s
Time t_S ($T_{S\ min}$ to $T_{S\ max}$)	t_S	60	100	120	s
Ramp-up rate to peak ($T_{S\ max}$ to T_P)	-	-	2	3	K/s
Liquidus temperature	T_L	-	217	-	℃
Time above liquidus temperature	t_L	-	80	100	s
Peak temperature	T_P	-	245	260	℃
Time within 5 ℃ of the specified peak temperature T_P - 5 K	t_P	-	-	10	s
Ramp-down Rate (T_P to 100 ℃)	-	-	3	4	K/s
Time 25 ℃ to T_P	-	-	-	480	s

Notes:

1. Do not stress the silicone resin while it is exposed to high temperature.
2. The reflow process should not exceed 3 times.

■ Test Circuit and Handling Precautions

1. Test Circuit

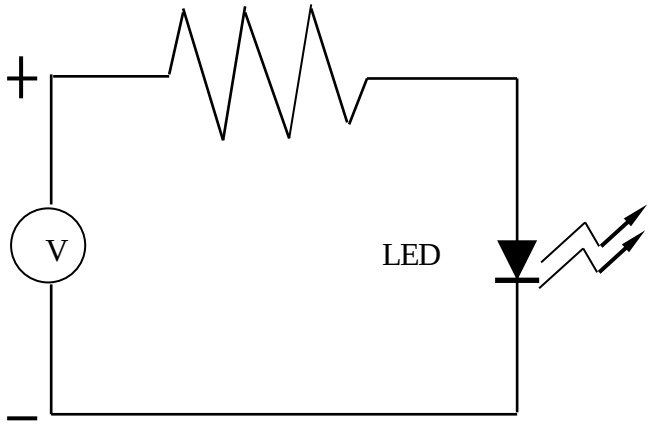

2. Handling Precautions

2.1. Over-current-proof

Customer must apply resistors for protection; otherwise slight voltage shift will cause big current change (Burn out will happen).

2.2. Storage

1). It is recommended to store the products in the following conditions:

Humidity: 60% R.H. Max.

Temperature: 5℃~30℃(41°F~86°F)

2). Shelf life in sealed bag: 12 month at ＜5℃~30℃ and ＜60% R.H. after the package is Opened, the products should be used within four weeks or they should be keeping to stored at ≦20%R.H. with zip-lock sealed.

2.3. Baking

If the package has been opened for more than 4 weeks or over than 12 months in sealed bag, it is recommended to bake the products with the following instruction:

1). 60±3℃ X 6hrs and ＜5%RH, for reel

2). 125±3℃ X 2hrs, for single LED

It shall be normal to see slight color fading of carrier (light yellow) after baking in process

■ Packing

- **Feeding Direction (Unit: mm)**

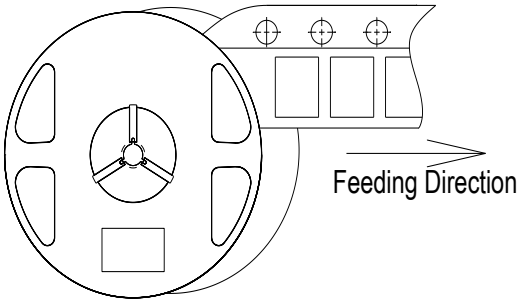

- **Dimensions of Reel (Unit: mm)**

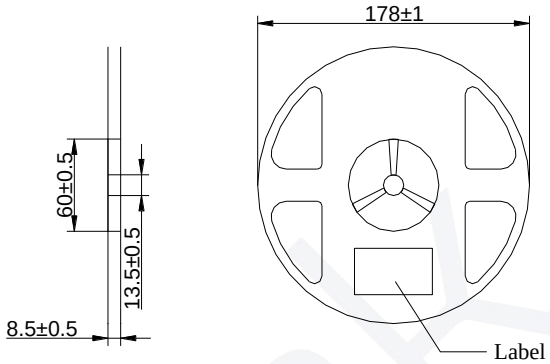

- **Dimensions of Tape (Unit: mm)**

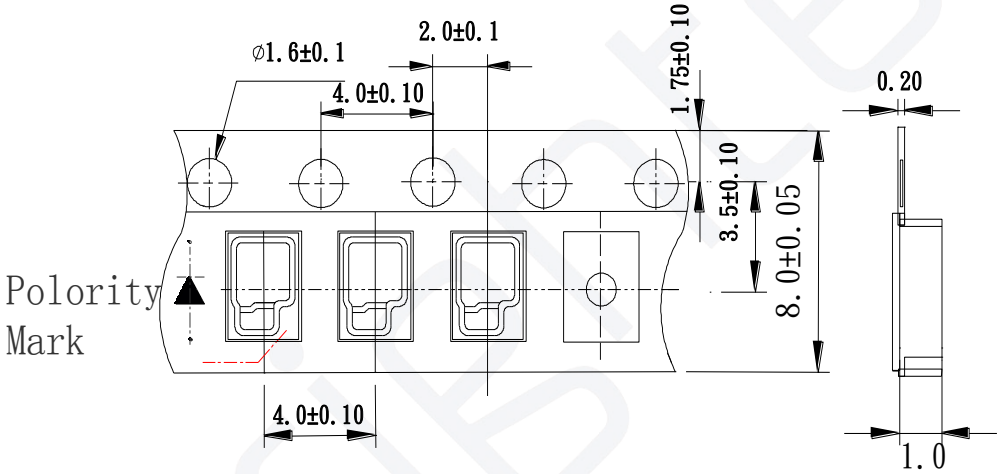

- **Arrangement of Tape**

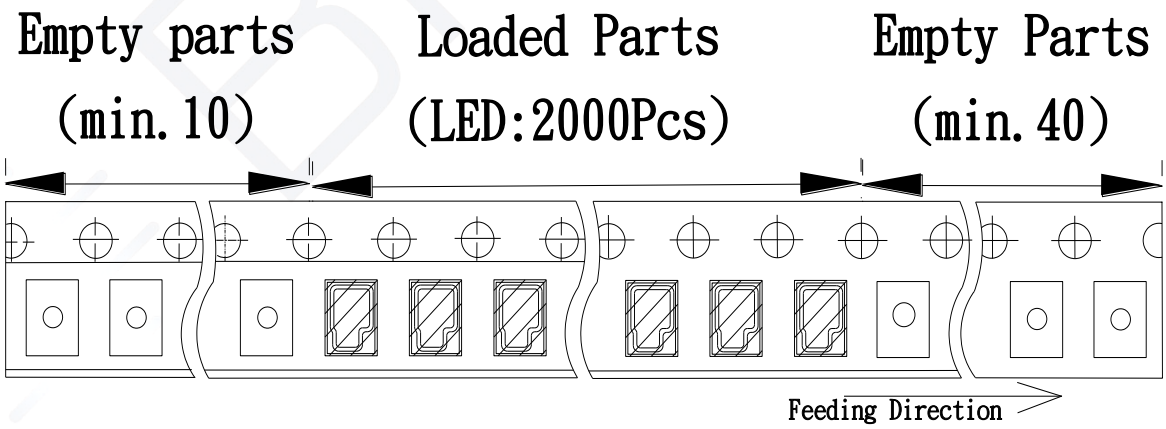

Notes:

1. Empty component pockets are sealed with top cover tape
2. The max loss number of SMD is 2pcs;
3. The cathode is oriented towards the tape sprocket hole in accordance with ANSI/EIA RS-481 specifications;
4. 2,000pcs per reel;
5. The remainder packing in multiples of 500pcs.

■ Packing

- **Packaging Specifications**

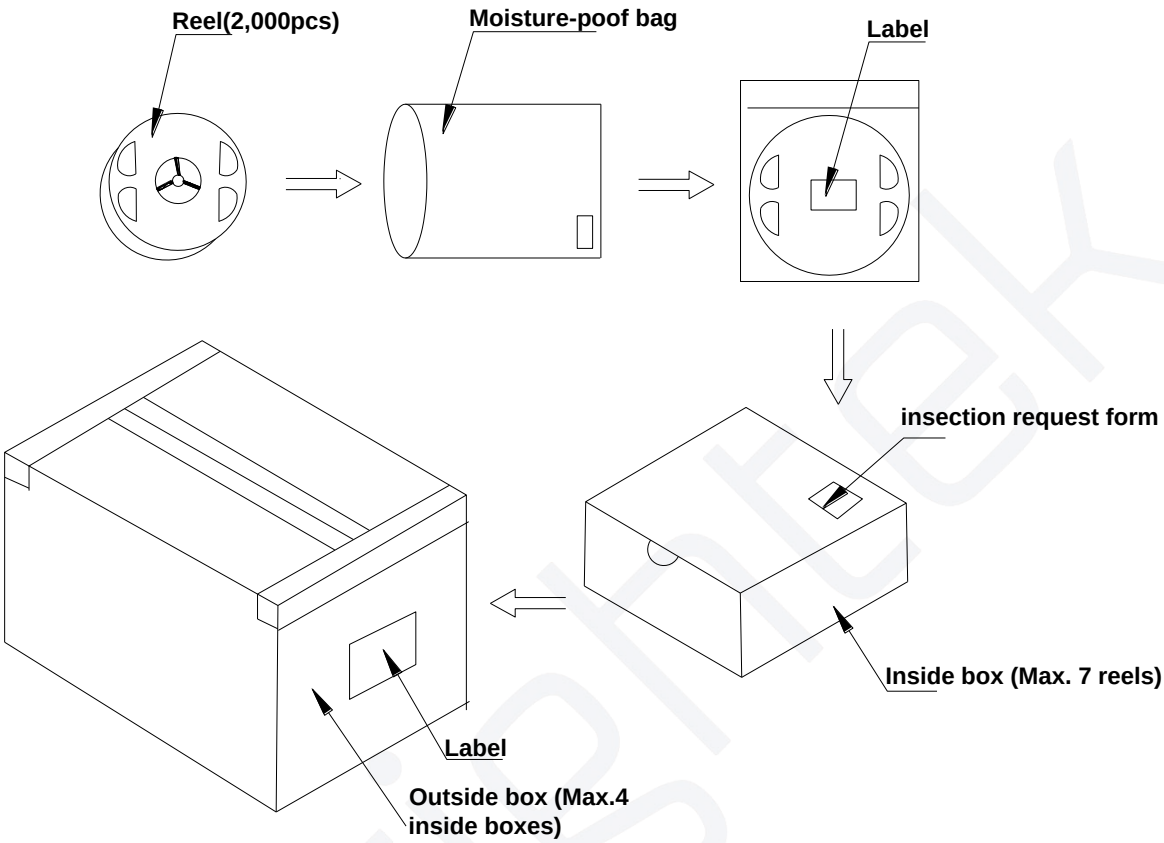

Notes:

Reeled product (max.2,000) is packed in a sealed moisture-proof bag. Seven bags are packed in an inner box (size: about 260 X 230 X 100 mm) and four inner boxes are in an outer box (size: about 480 X 275 X 215 mm). On the label of moisture-poof bag, there should be the information of Part No., Lot No. and quantity number; also the total quantity number should be on inspection request form on outer box.

.

■ Precautions

---

1. **Abnormal situation caused by improper setting of collet**

To choose the right collet is the key issue in improving the product's quality. LED is different from other electronic components, which is not only about electrical output but also for optical output. This characteristic made LED more fragile in the process of SMT. If the collet's lowering down height is not well set, it will bring damage to the gold wire at the time of collet's picking up and loading which will cause the LED fail to light up, light up now and then or other quality problems

2. **How to choose the collet**

During SMT, please choose the collet that has larger outer diameter than the lighting area of lens, in case that improper position of collet will damage the gold wire inside the LED. Different collets fit for different products, please refer to the following pictures cross out

Outer diameter of collet should be larger than the lighting area

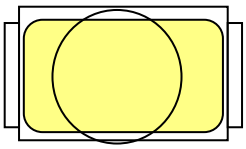

Picture 1(√)

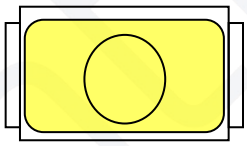

Picture 2(X)

3. **Other points for attention**

A. No pressure should be exerted to the epoxy shell of the SMD under high temperature.

B. Do not scratch or wipe the lens since the lens and gold wire inside are rather fragile and cross out easy to break.

C. LED should be used as soon as possible when being taken out of the original package, and should be stored in anti-moisture and anti-ESD package.

4. **This usage and handling instruction is only for your reference.**

■ Test Items and Results of Reliability

Test Item	Test Conditions	Duration/ Cycle	Number of Damage	Reference
Thermal Shock	–40℃ 30min ↑↓5min 105℃ 30min	1000 cycles	0/26	JESD22 A-106
High Temperature Storage	T_a=105℃	1000 hrs	0/26	JESD22 A-103B
Low Temperature Storage	T_a=-40℃	1000 hrs	0/26	JESD22 A-119
Life Test	T_a=25℃ If=200mA	1000 hrs	0/26	JESD22 A-108
High Humidity Heat Operation	85℃ RH=85% If=200mA	1000 hrs	0/26	JESD22 A-101
High Temperature Operation	T_a=105℃ If=200mA	1000 hrs	0/26	JESD22 A-108C
ESD(HBM)	8KV at 1.5kΩ;100pF	3 times	0/30	ANSI/JEDEC JS-001

Failure Criteria				
Item	**Symbol**	**Condition**	**Criteria for Judgment**	
			Min	**Max**
Forward Voltage	V_F	If=200mA	-	USL[1]×1.1
Reverse Current	I_R	V_R =5V	-	10μA
Luminous Intensity	Iv	If=200mA	LSL[2]×0.7	-

[Note] USL*[1]: Upper Specification Level

LSL*[2]: Lower Specification Level

Note: Version updates will not be announced and Brightek will have the final interpretation rights