TD301X,TD302X,TD305X Series

DIP6, DC Input, Random-Phase Photo TRIAC Coupler

Description

The TD301X, TD302X and TD305X series combine an AlGaAs infrared emitting diode as the emitter which is optically coupled to a monolithic silicon random-phase photo triac in a plastic DIP6 package with different lead forming options.
With the robust coplanar double mold structure, TD301X, TD302X and TD305X series provide the most stable isolation feature.

Features

- High isolation 5000 VRMS
- DC input with random-phase photo triac output
- Operating temperature range - 40 °C to 100 °C
- REACH & RoHS compliance
- MSL class 1
- Regulatory Approvals
  - UL - UL1577
  - VDE - EN60747-5-5(VDE0884-5)
  - CQC - GB4943.1, GB8898
  - cUL- CSA Component Acceptance Service Notice No. 5A

Applications

- Solenoid/valve controls
- Lighting controls
- Motor controls
- Temperature controls
- Static AC power switches
- Solid state relays
- Interfacing microprocessors to 115 to 240VAC peripherals

SCHEMATIC

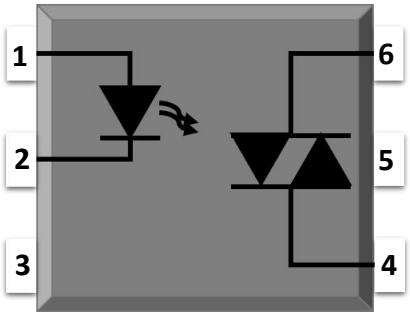

PIN DEFINITION

1. Anode
2. Cathode
3. NC
4. Terminal
5. Substrate
6. Terminal

PACKAGE OUTLINE

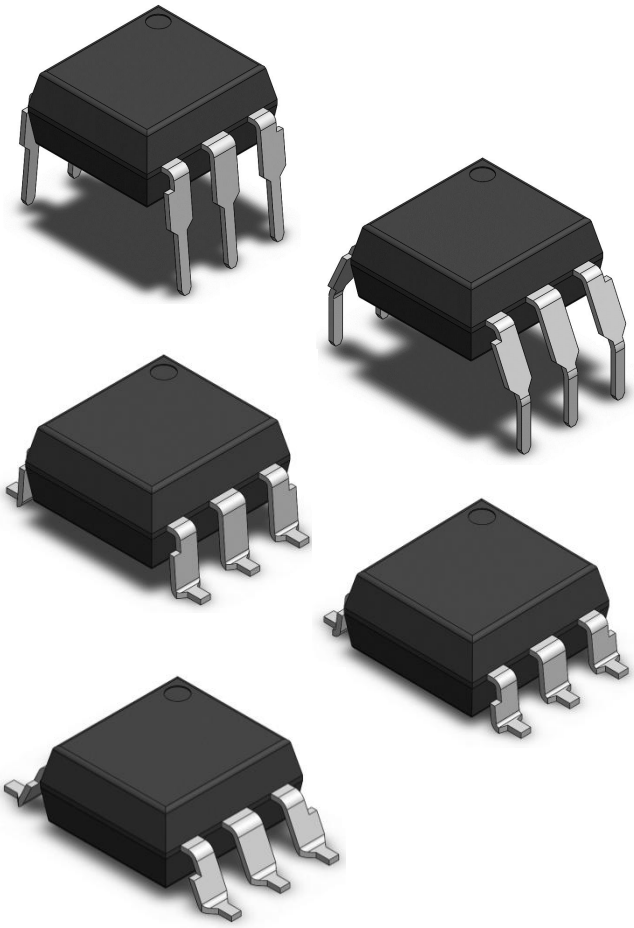

ABSOLUTE MAXIMUM RATINGS

PARAMETER		SYMBOL	VALUE	UNIT	NOTE
INPUT					
Forward Current		I_F	60	mA	
Reverse Voltage		V_R	6	V	
Junction Temperature		Tj	125	°C	
Input Power Dissipation		P_I	100	mW	
OUTPUT					
Off-state Output Terminal Voltage	TD301X	V_{DRM}	250	V	
	TD302X		400		
	TD305X		600		
Peak Repetitive Surge Current PW=100μs, 120pps		I_{TSM}	1	A	
On-State RMS Current		$I_{T(RMS)}$	100	mA	
Junction Temperature		Tj	125	°C	
Output Power Dissipation		P_O	300	mW	
COMMON					
Total Power Dissipation		Ptot	400	mW	
Isolation Voltage		Viso	5000	Vrms	1
Operating Temperature		Topr	-40~100	°C	
Storage Temperature		Tstg	-55~125	°C	
Soldering Temperature		Tsol	260	°C	2

Note 1. AC For 1 Minute, R.H. = 40 ~ 60%

Note 2. For 10 seconds

ELECTRICAL OPTICAL CHARACTERISTICS at Ta=25°C

PARAMETER		SYMBOL	MIN.	TYP.	MAX.	UNIT	TEST CONDITION	NOTE
INPUT								
Forward Voltage		V_F	-	1.24	1.4	V	I_F=10mA	
Reverse Current		I_R	-	-	10	μA	V_R=6V	
Input Capacitance		Cin	-	8.5	250	pF	V=0, f=1kHz	
OUTPUT								
Peak Off-state Current, Either Direction		I_{DRM}	-	-	100	nA	V_{DRM}=Rated V_{DRM} I_F=0	3
Peak On-state Current, Either Direction		V_{TM}	-	1.58	2.5	V	I_{TM}=100mA	
Critical Rate of Rise of Off-state Voltage		dV/dt	1000	-	-	V/μs	V_{PEAK} =Rated V_{DRM}	4
TRANSFER CHARACTERISTICS								
LED Trigger Current	TD3010,TD3021,TD3051	I_{FT}	-	-	15	mA	Terminal Voltage = 3V I_{TM}=100mA	
	TD3011,TD3022,TD3052		-	-	10			
	TD3012,TD3023,TD3053		-	-	5			
Holding Current		I_H	-	257	-	μA		
Isolation Resistance		Riso	10^12	10^14	-	Ω	DC500V, 40 ~ 60% R.H.	
Floating Capacitance		C_{IO}	-	0.8	-	pF	V=0, f=1MHz	

Note3. Test voltage must be applied within dV/dt rating.

Note4. Refer to Fig.15 & Fig.16

CHARACTERISTIC CURVES

Fig.1 Forward Current vs. Ambient Temperature

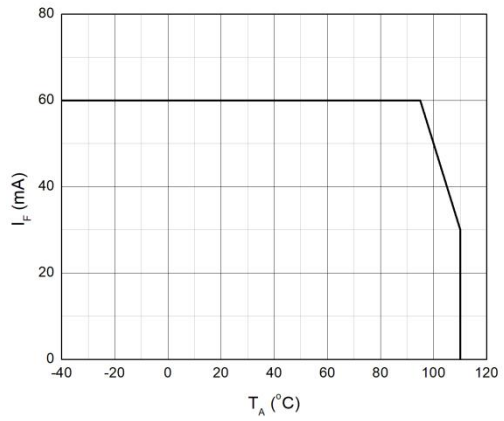

Fig.2 On-state Terminal Current vs. Ambient Temperature

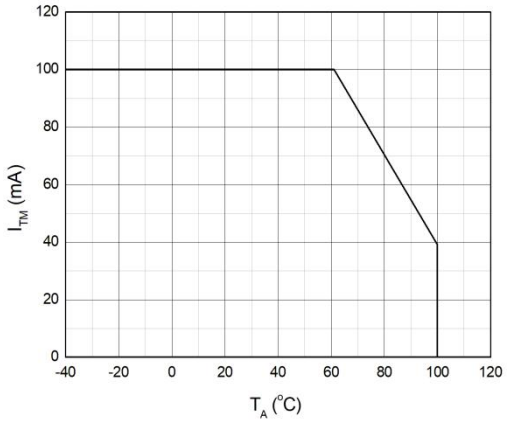

Fig.3 Forward Current vs. Forward Voltage

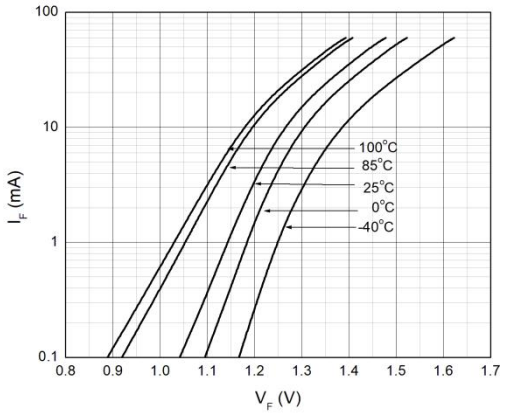

Fig.4 Off-state Terminal Current vs. Ambient Temperature

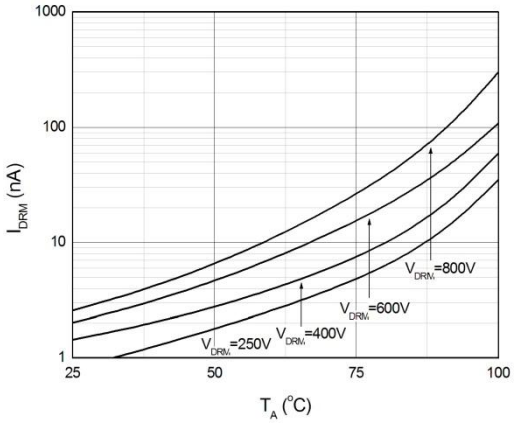

Fig.5 Normalized Off-state Terminal Voltage vs. Ambient Temperature

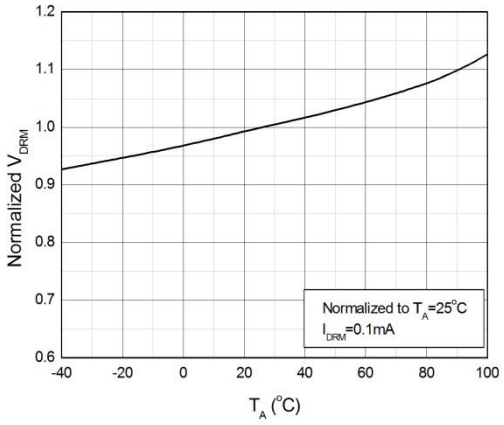

Fig.6 Normalized Trigger Current vs. LED Trigger Pulse Width

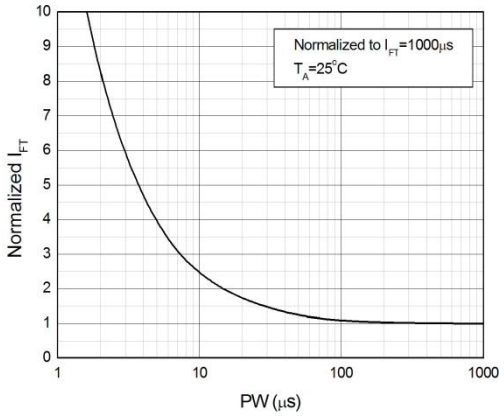

CHARACTERISTIC CURVES

Fig.7 Normalized Trigger Current vs. Ambient Temperature

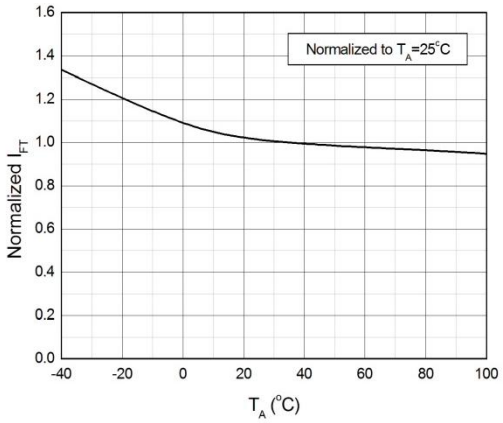

Fig.8 On-state Terminal Voltage vs. Ambient Temperature

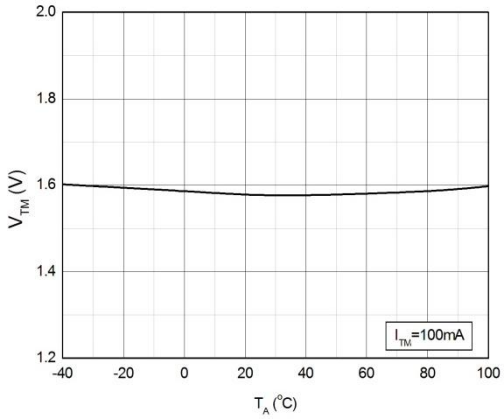

Fig.9 On-state Terminal Voltage vs. On-state Terminal Current

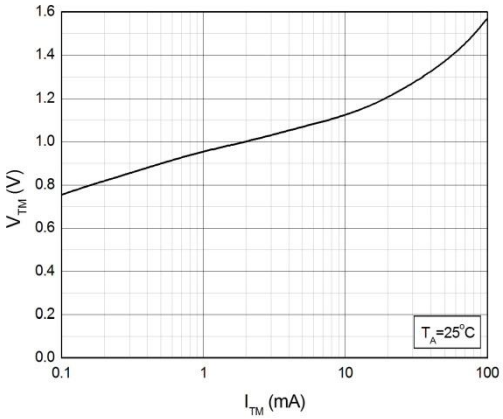

Fig.10 Holding Current vs. Ambient Temperature

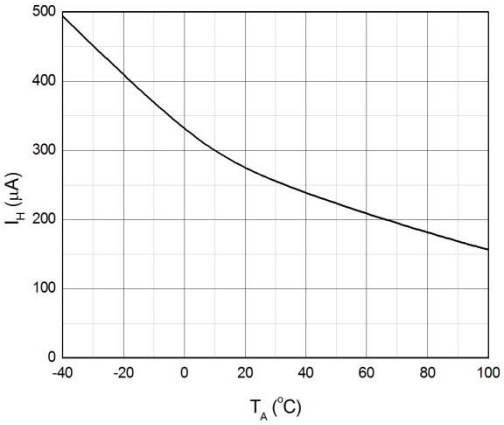

Fig.11 Turn On Time vs. Forward Current

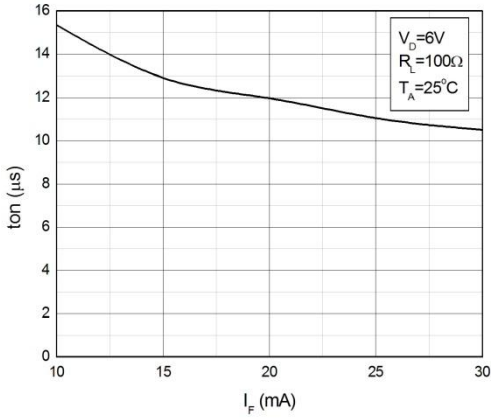

Fig.12 Turn On Time vs. Ambient Temperature

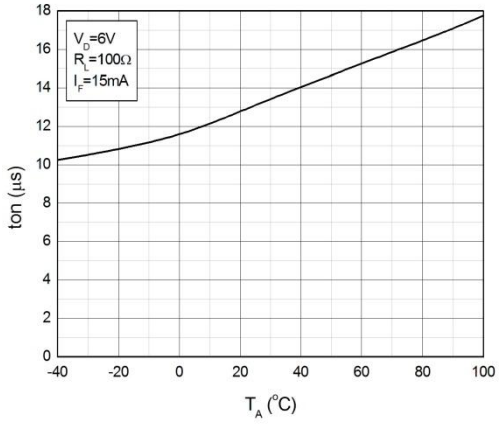

TEST CIRCUITS

Fig.13 Test Circuits of Turn On Time

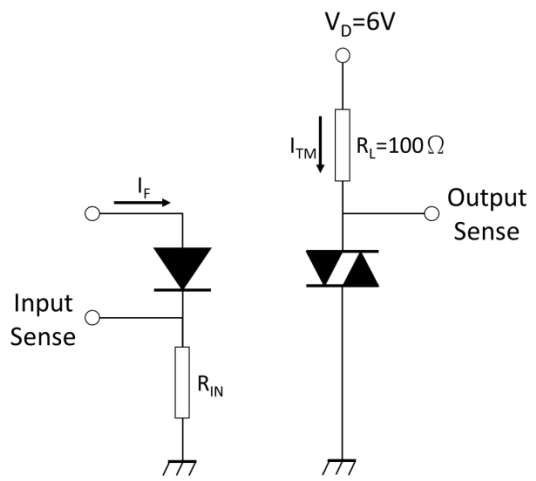

Fig.14 Waveforms of Turn On Time

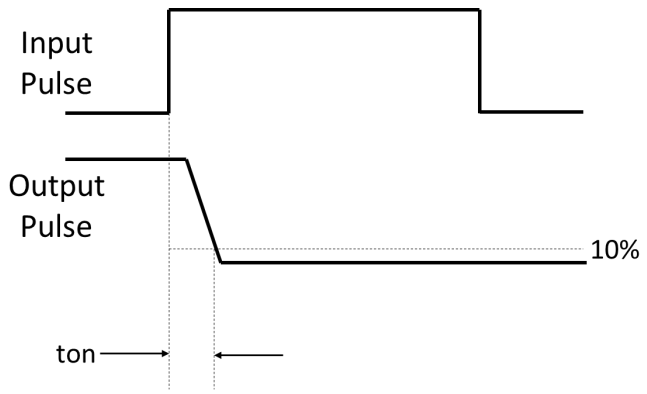

Fig.15 Test Circuits of dV/dt

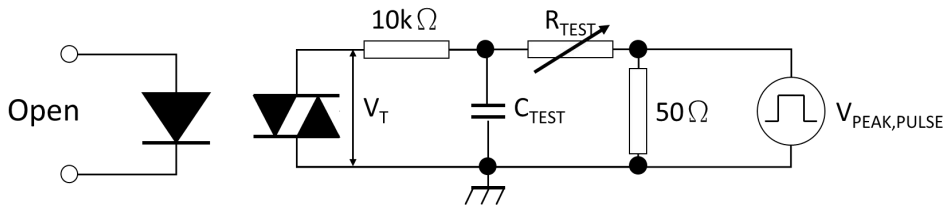

Fig.16 Waveforms of dV/dt

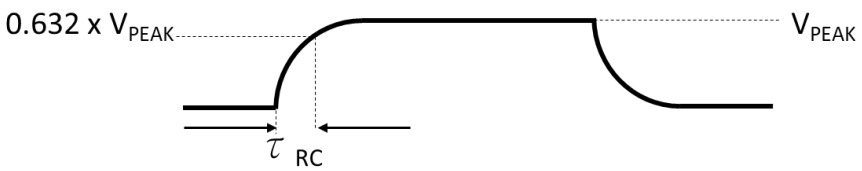

$$dv/dt = \frac{0.632 \times V_{PEAK}}{\tau_{RC}}$$

PACKAGE DIMENSIONS (Dimensions in mm unless otherwise stated)

Standard DIP – Through Hole (DIP Type)

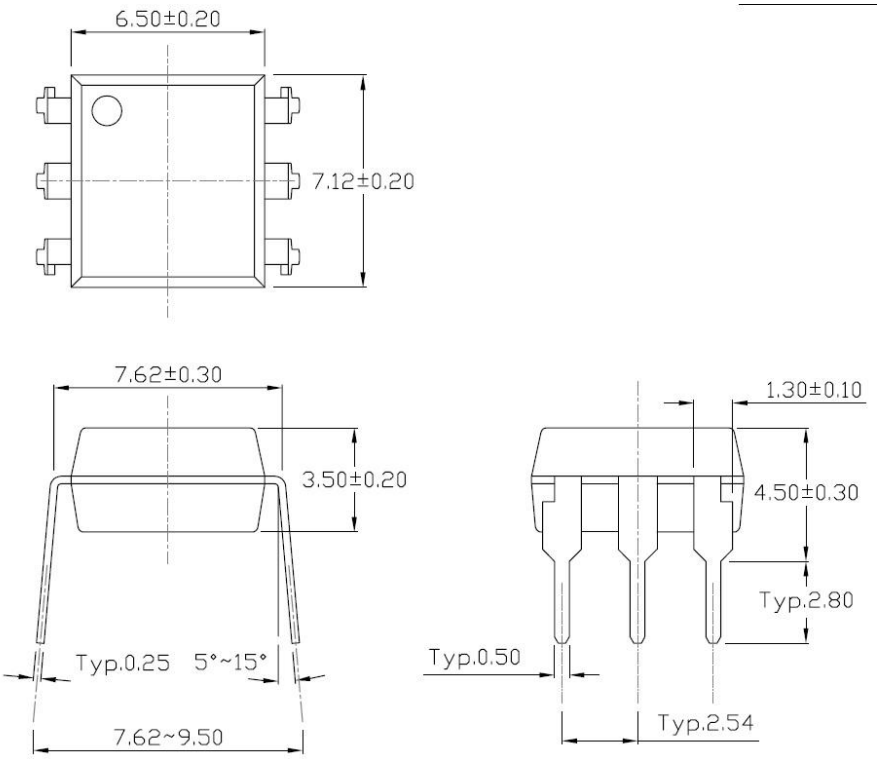

Gullwing (400mil) Lead Forming – Through Hole (M Type)

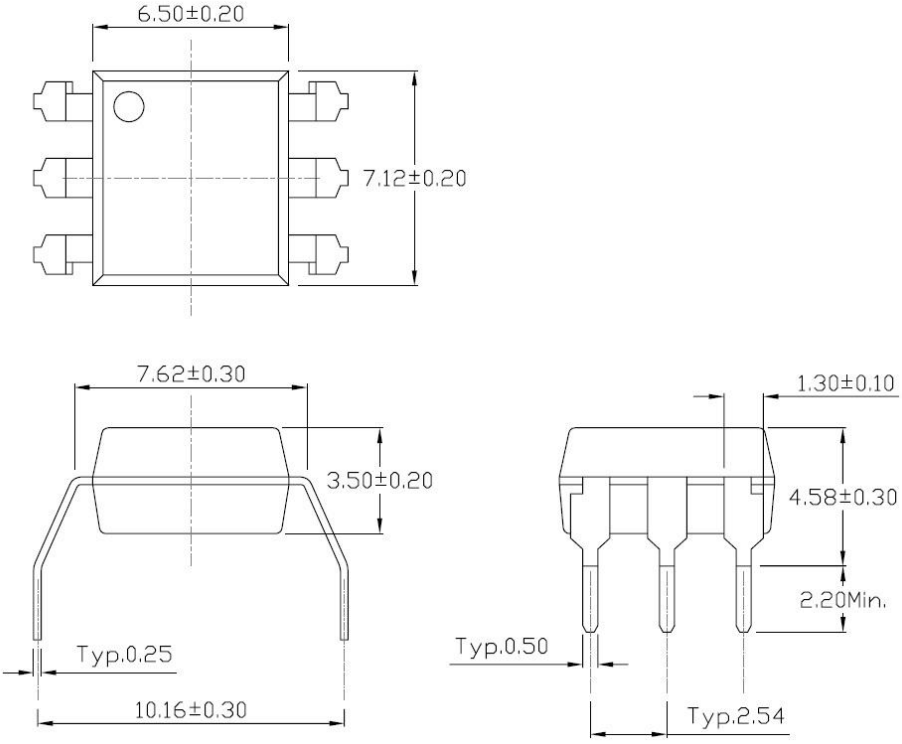

PACKAGE DIMENSIONS (Dimensions in mm unless otherwise stated)

Surface Mount Lead Forming (S Type)

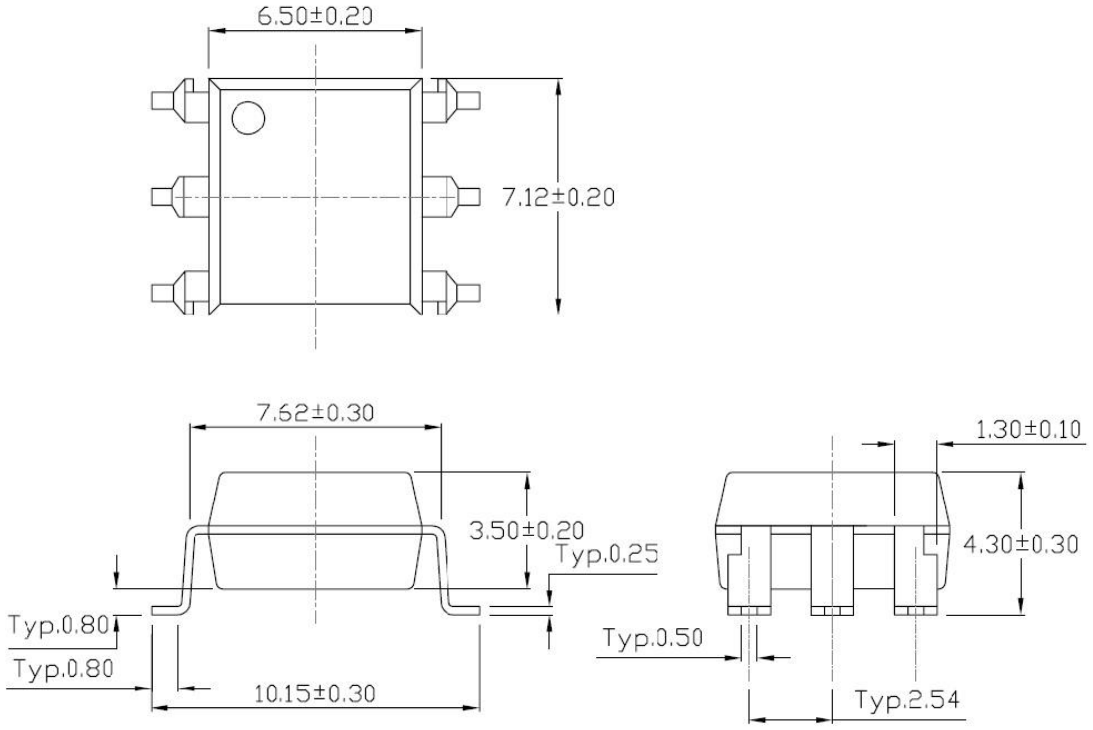

Surface Mount (Low Profile) Lead Forming (SL Type)

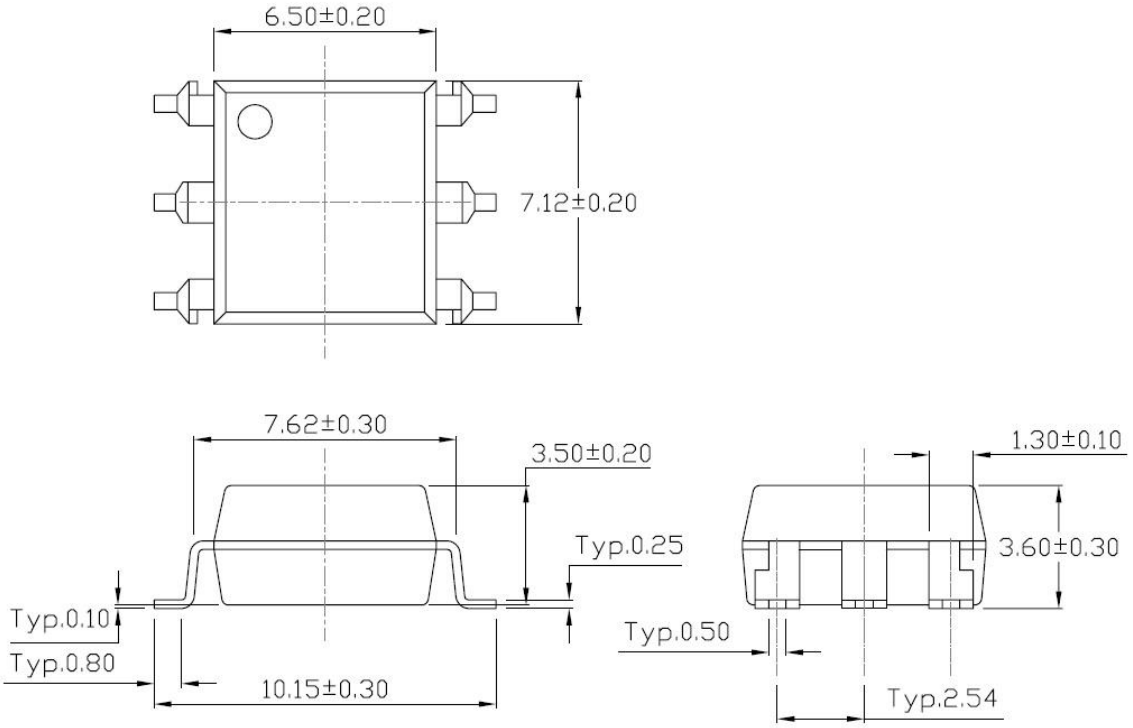

RECOMMENDED SOLDER MASK (Dimensions in mm unless otherwise stated)

Surface Mount Lead Forming & Surface Mount (Low Profile) Lead Forming

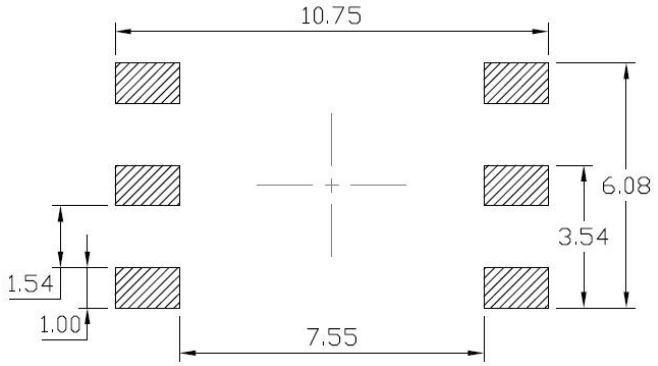

Surface Mount (Gullwing) Lead Forming

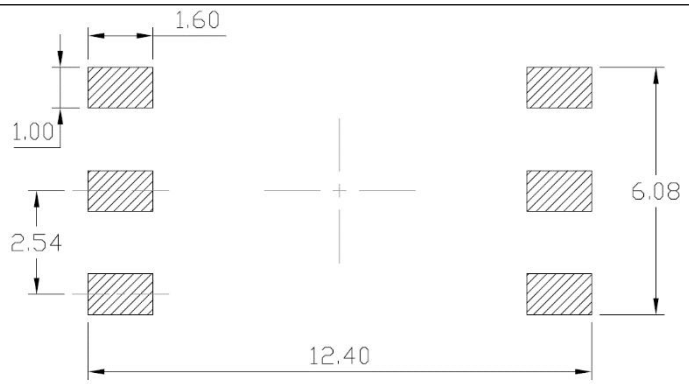

TUBE SPECIFICATIONS (Dimensions in mm unless otherwise stated)

Standard DIP

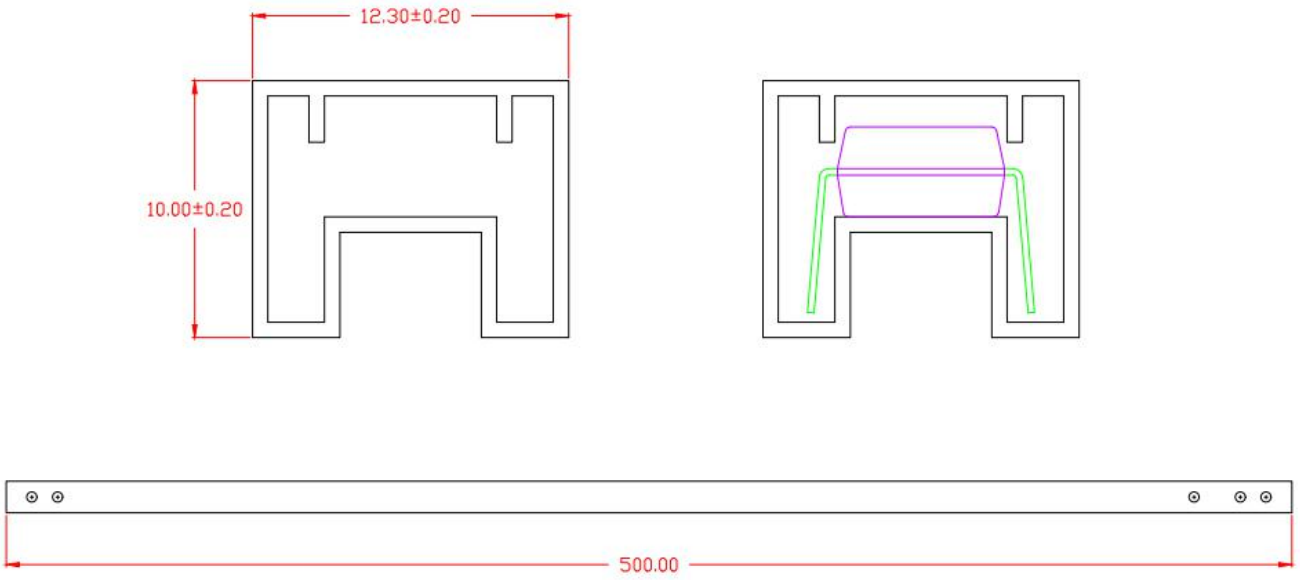

BOX SPECIFICATIONS (Tube Type)

Inner Box

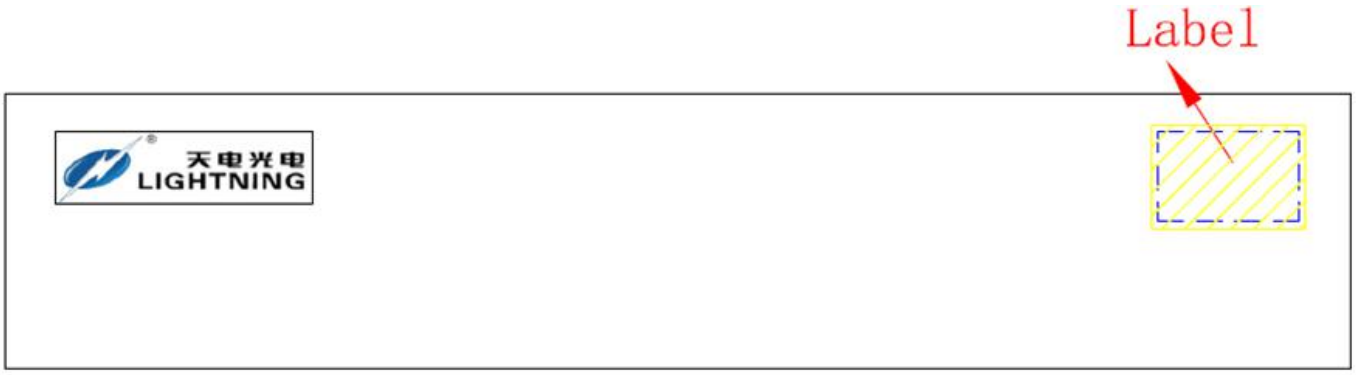

- L x W x H = 52.5cm x 10.7cm x 4.7cm

Outer Box

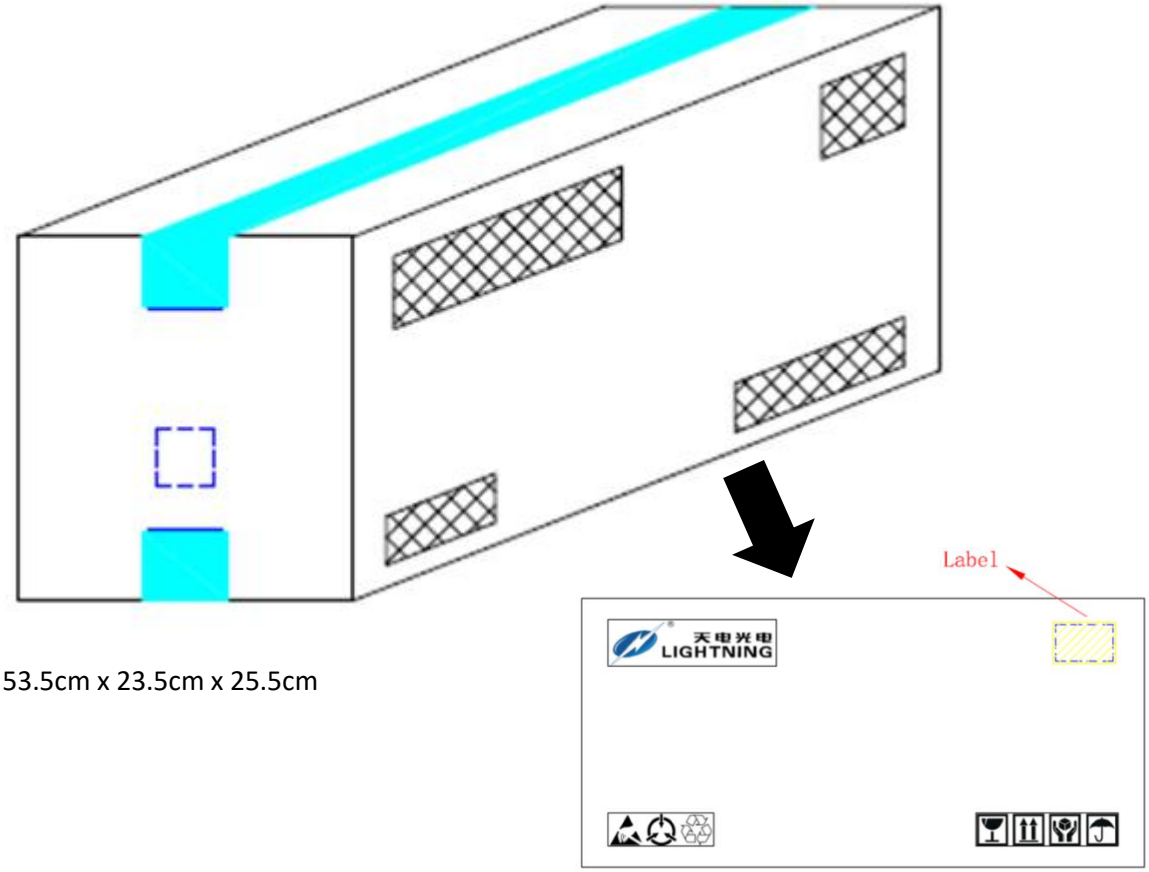

- L x W x H = 53.5cm x 23.5cm x 25.5cm

CARRIER TAPE SPECIFICATIONS (Dimensions in mm unless otherwise stated)

Option S(T1) & SL(T1)

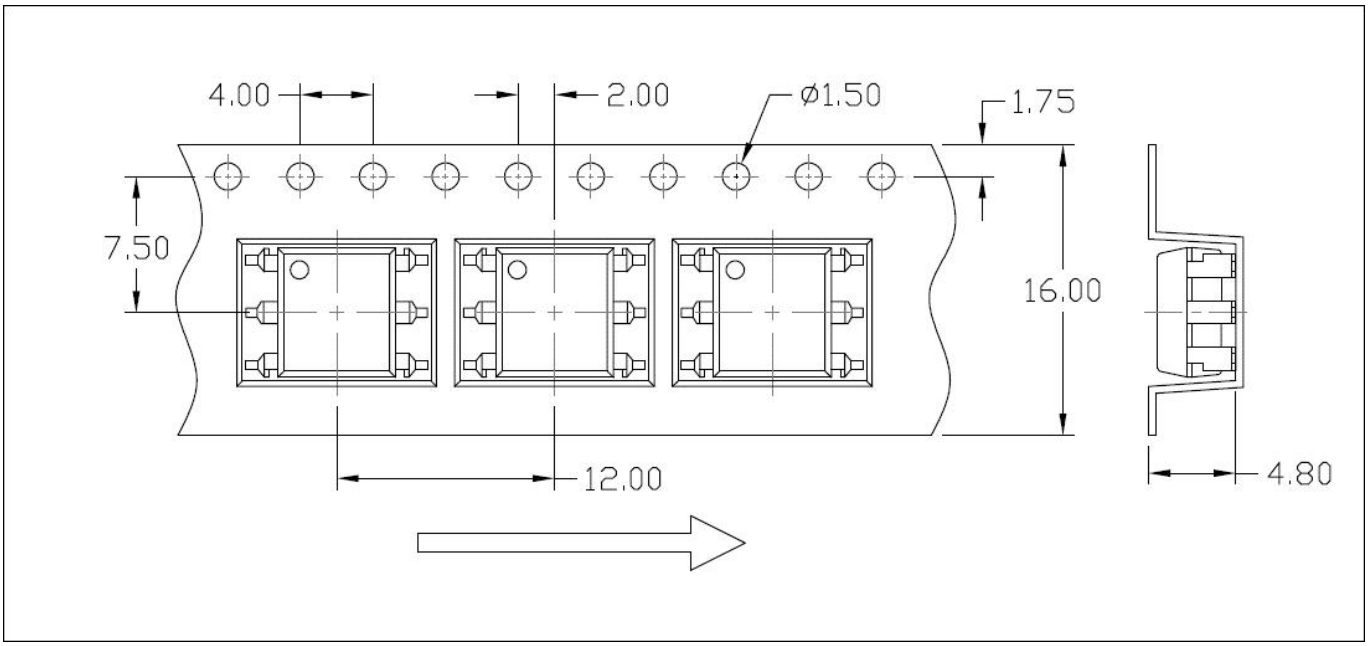

Option S(T2) & SL(T2)

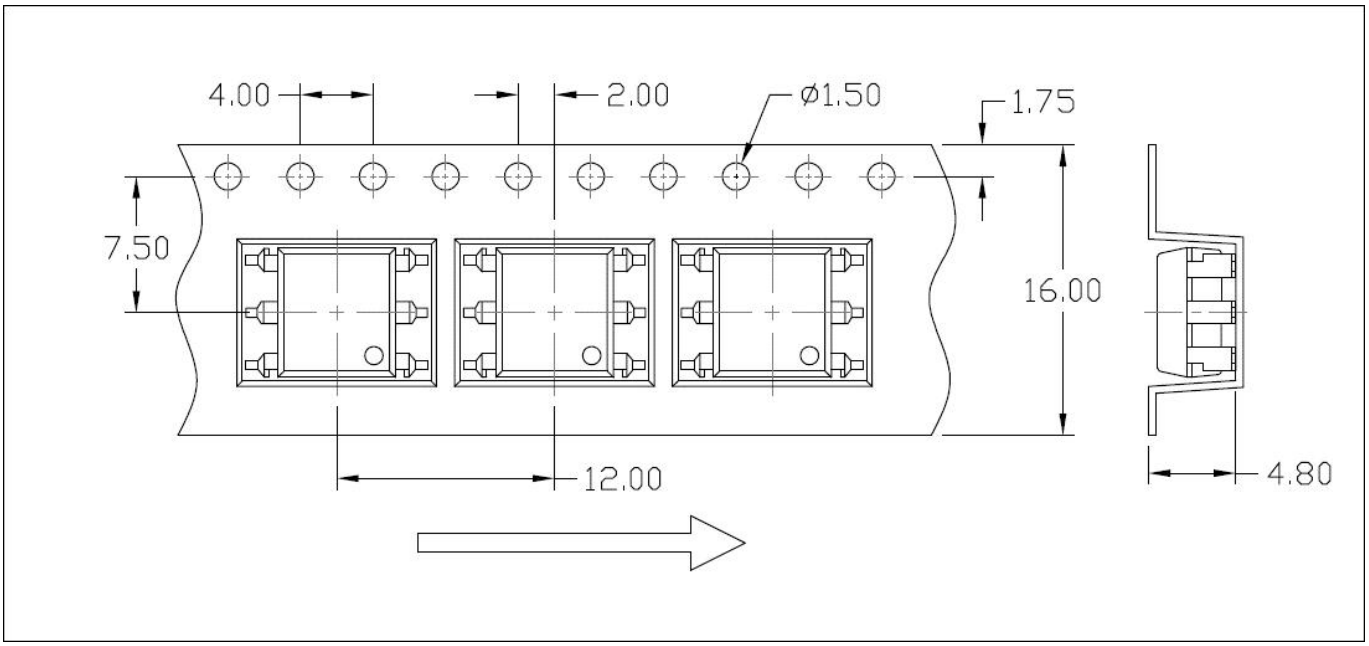

CARRIER TAPE SPECIFICATIONS (Dimensions in mm unless otherwise stated)

Option SLM(T1)

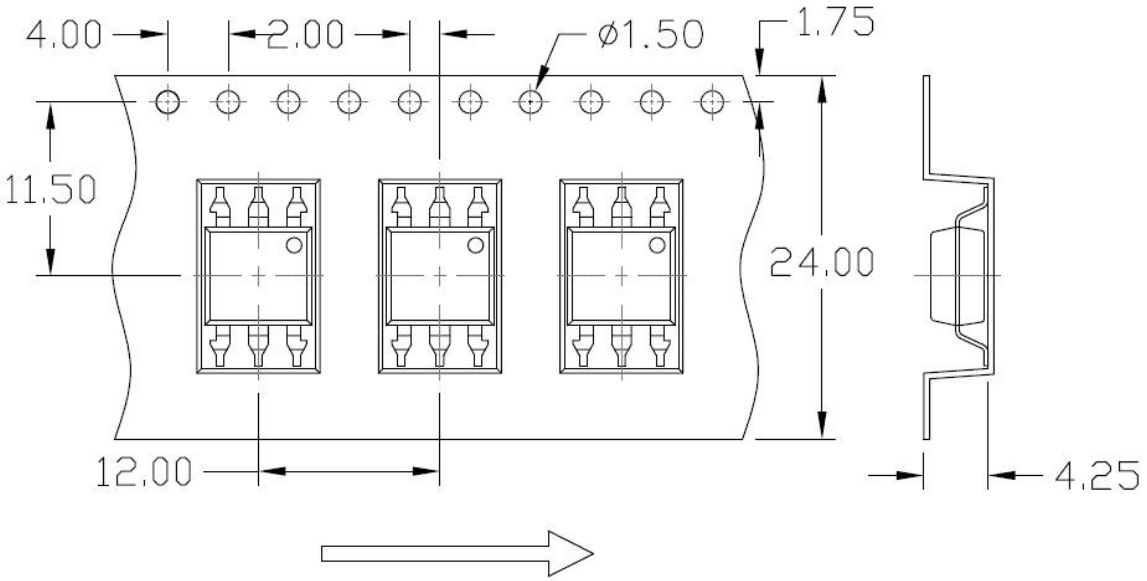

Option SLM(T2)

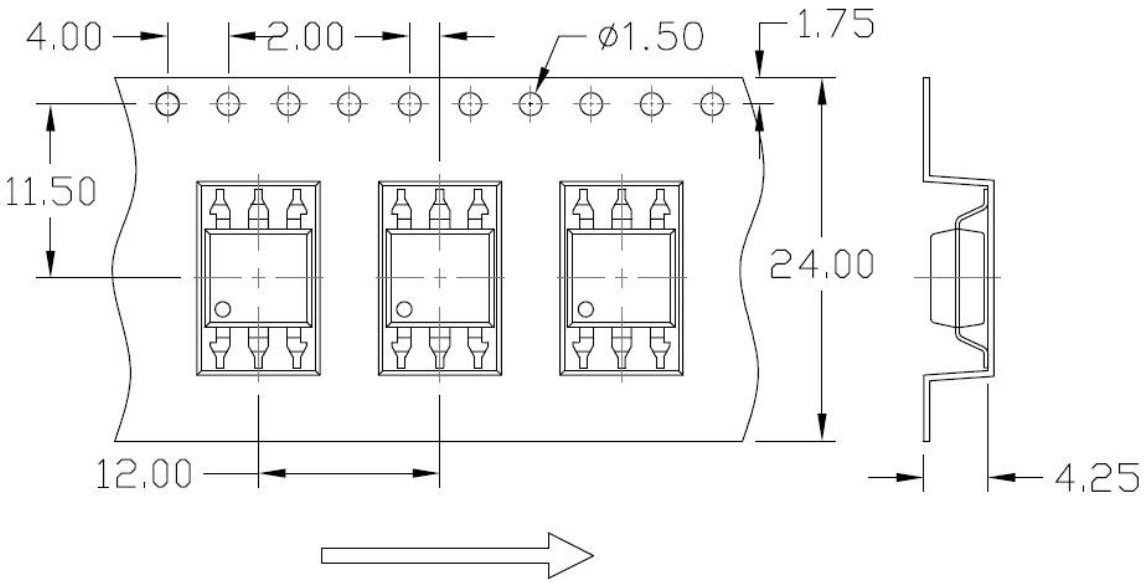

REEL SPECIFICATIONS (Dimensions in mm unless otherwise stated)

Option S & Option SL

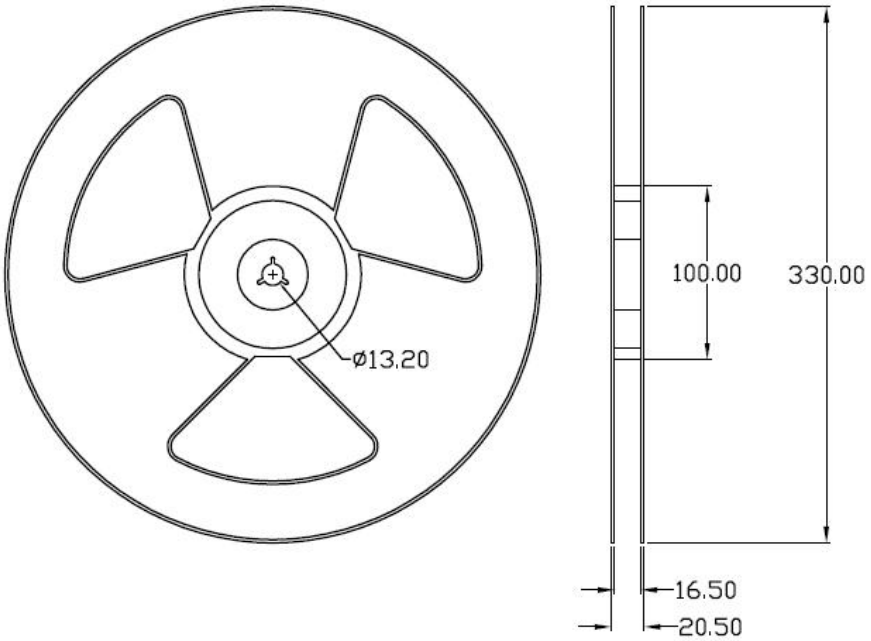

Option SLM

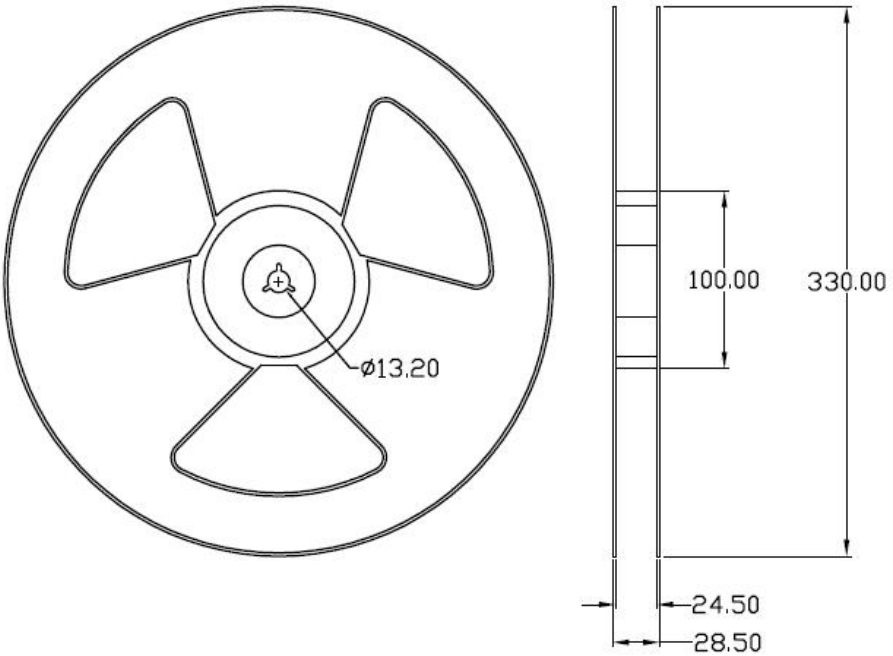

BOX SPECIFICATIONS (Reel Type)

Inner Box

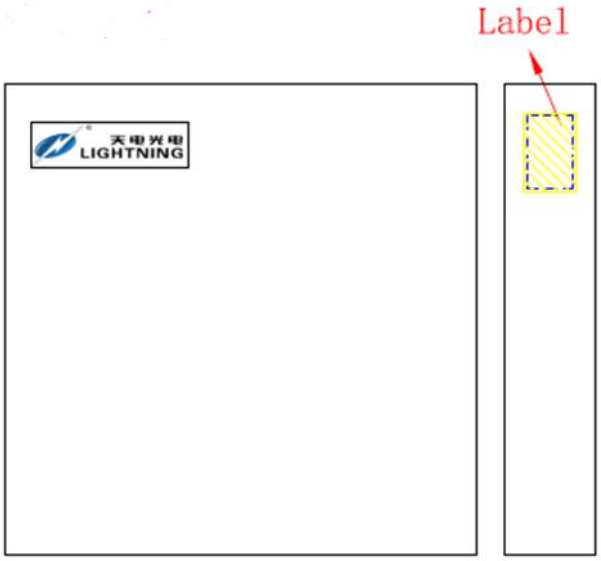

- L x W x H = 36cm x 36cm x 6.9cm

Outer Box

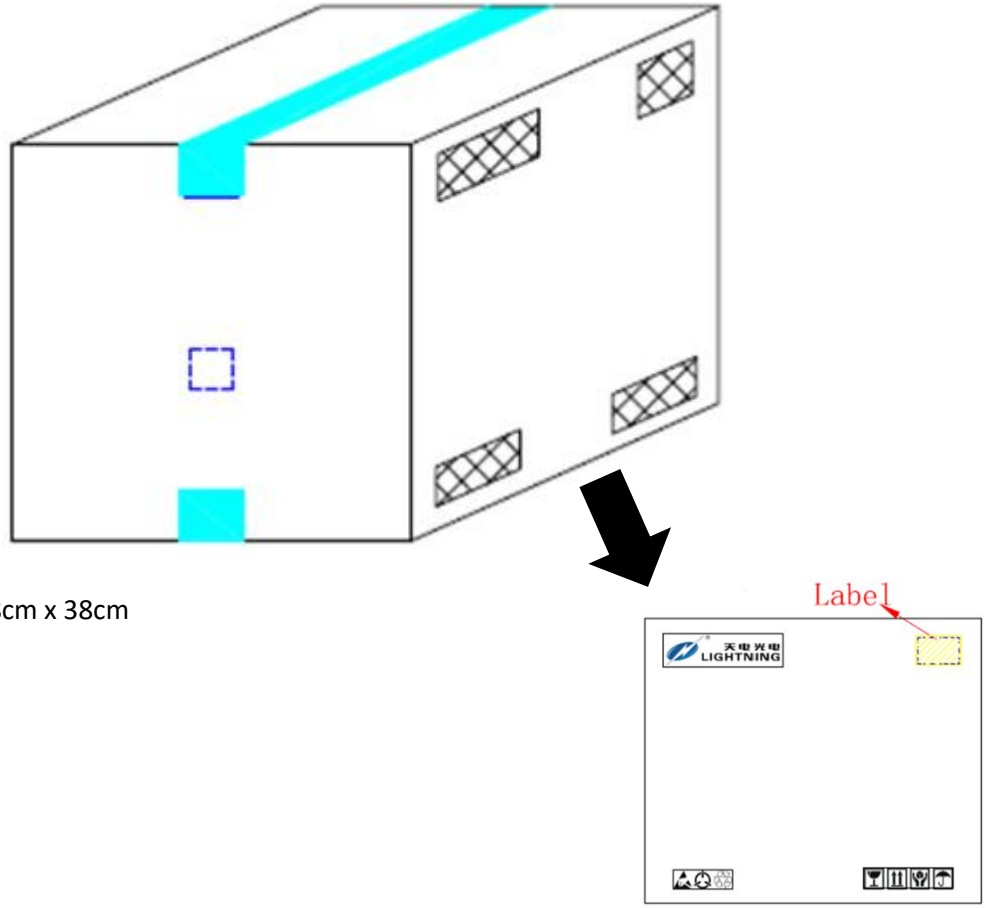

- L x W x H = 45cm x 38cm x 38cm

ORDERING AND MARKING INFORMATION

MARKING INFORMATION

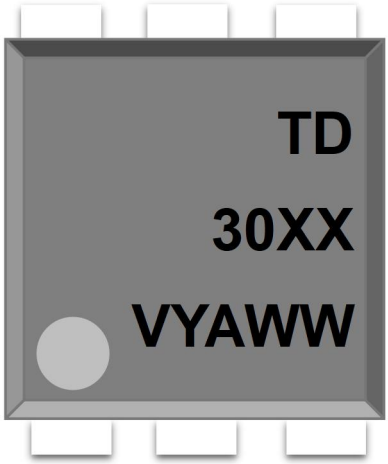

TD : Company Abbr.
30XX : Part Number & Rank
V : VDE Option
Y : Fiscal Year
A : Manufacturing Code
WW : Work Week

ORDERING INFORMATION

TD30XX(Y)(Z)-GV

TD – Company Abbr.
30XX – Part Number
(10/11/12/21/22/23/51/52/53)
Y – Lead Form Option (M/S/SL/None)
Z – Tape and Reel Option (T1/T2)
G – Green Option (G or None)
V – VDE Option (V or None)

LABEL INFORMATION

Packing Quantity

Option	Quantity	Quantity – Inner box	Quantity – Outer box
None	50 Units/Tube	32 Tubes/Inner box	10 Inner box/Outer box = 16k Units
M	50 Units/Tube	32Tubes/Inner box	10 Inner box/Outer box = 16k Units
S(T1)	1000 Units/Reel	3 Reels/Inner box	5 Inner box/Outer box = 15k Units
S(T2)	1000 Units/Reel	3 Reels/Inner box	5 Inner box/Outer box = 15k Units
SL(T1)	1000 Units/Reel	3 Reels/Inner box	5 Inner box/Outer box = 15k Units
SL(T2)	1000 Units/Reel	3 Reels/Inner box	5 Inner box/Outer box = 15k Units

REFLOW INFORMATION

REFLOW PROFILE

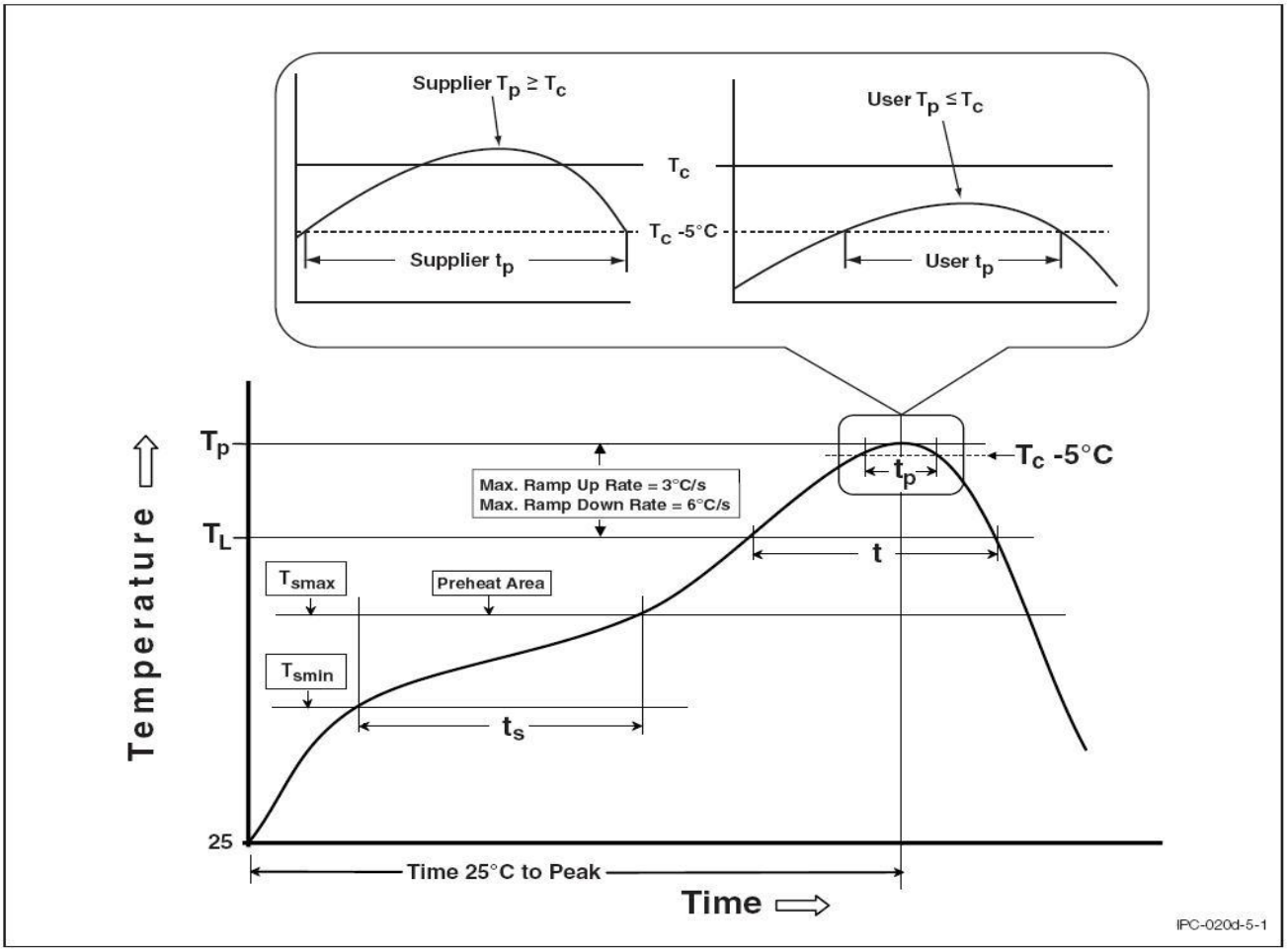

Profile Feature	Sn-Pb Assembly Profile	Pb-Free Assembly Profile
Temperature Min. (Tsmin)	100	150°C
Temperature Max. (Tsmax)	150	200°C
Time (ts) from (Tsmin to Tsmax)	60-120 seconds	60-120 seconds
Ramp-up Rate (tL to tP)	3°C/second max.	3°C/second max.
Liquidous Temperature (TL)	183°C	217°C
Time (tL) Maintained Above (TL)	60 – 150 seconds	60 – 150 seconds
Peak Body Package Temperature	235°C +0°C / -5°C	260°C +0°C / -5°C
Time (tP) within 5°C of 260°C	20 seconds	30 seconds
Ramp-down Rate (TP to TL)	6°C/second max	6°C/second max
Time 25°C to Peak Temperature	6 minutes max.	8 minutes max.

DISCLAIMER

- LIGHTNING is continually improving the quality, reliability, function and design. LIGHTNING reserves the right to make changes without further notices.
- The characteristic curves shown in this datasheet are representing typical performance which are not guaranteed.
- LIGHTNING makes no warranty, representation or guarantee regarding the suitability of the products for any particular purpose or the continuing production of any product. To the maximum extent permitted by applicable law, LIGHTNING disclaims (a) any and all liability arising out of the application or use of any product, (b) any and all liability, including without limitation special, consequential or incidental damages, and (c) any and all implied warranties, including warranties of fitness for particular
- The products shown in this publication are designed for the general use in electronic applications such as office automation, equipment, communications devices, audio/visual equipment, electrical application and instrumentation purpose, non-infringement and merchantability.
- This product is not intended to be used for military, aircraft, automotive, medical, life sustaining or lifesaving applications or any other application which can result in human injury or death.
- Please contact LIGHTNING sales agent for special application request.
- Immerge unit's body in solder paste is not recommended.
- Parameters provided in datasheets may vary in different applications and performance may vary over time. All operating parameters, including typical parameters, must be validated in each customer application by the customer's technical experts. Product specifications do not expand or otherwise modify LIGHTNING's terms and conditions of purchase, including but not limited to the warranty expressed therein.
- Discoloration might be occurred on the package surface after soldering, reflow or long-time use. It neither impacts the performance nor reliability.