BRIGHTEK
BRIGHTEK (EUROPE) LIMITED
Brighten Up The World With LED!

ISO/TS 16949:2009 | BS EN ISO 14001:2004 | QC 080000 IECQ HSPM

PRODUCT DATASHEET

- Ceramic High Power
- 6868 1.85t Series
- Ultraviolet UVC (260-280nm)

Release Date: 02 March 2021 Version: A1.1

N0Q58S09Z-260270
N0Q58S09Z-270280

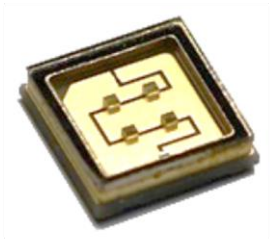

6868 1.85t Series

6868 1.85t Series

RoHS Compliant

FEATURES:

- **Package:** Ceramic SMT Package with Glass Lens
- **Forward Current:** 400mA
- **Forward Voltage (typ.):** 6V
- **Radiant Power (typ.):** 50mW@400mA
- **Colour:** Ultraviolet C (UVC)
- **Peak Wavelength:** 260~280nm
- **Viewing angle:** 120°
- **Materials:**
  - Die: AlGaN Flip Chip
  - Resin: Quartz Glass (Water Clear)
  - Electrodes: Au plated
- **Operating Temperature:** -30~+60°C
- **Storage Temperature:** -40~+100°C
- **Grouping parameters:**
  - Forward Voltage
  - Radiant Power
  - Peak Wavelength
- **Soldering methods:** IR Reflow
- **Moisture Sensitive Level:** MSL 2 according to J-STD020
- **Packing:** 12mm tape with min.100pcs/reel, ø180mm (7'')

APPLICATIONS:

- Sterilization
- Air Purifier
- Blood Detector
- Skin Therapy
- Dermatology
- Water Purifier
- Disinfection

CHARACTERISTICS:

Absolute Maximum Characteristics (Ta=25°C)

Parameter	Symbol	Ratings	Unit
DC Forward Current	I_F	600	mA
Power Dissipation	P_D	4.4	W
Junction Temperature	T_j	85	°C
Operating Temperature	T_{OPR}	-30~+60	°C
Storage Temperature	T_{STG}	-40~+100	°C

Electrical & Optical Characteristics (Ta=25°C)

Parameter	Symbol	Values			Unit	Test Condition
		Min.	Typ.	Max.		
Forward Voltage	V_F	5.0	6.0	6.8	V	I_F=400mA
Radiant Power	P_O	40	50	80	mW	I_F=400mA
Peak Wavelength	λ_D	260	270	280	nm	I_F=400mA
Viewing Angle	$2\theta_{1/2}$	---	120	---	deg	I_F=400mA

1. Radiant power (Φ_V) ±7%, Forward Voltage (V_F) ±0.05V, Viewing angle($2\theta_{1/2}$) ±10°, Peak wavelength (λ_D) ±1nm.

OUTLINE DIMENSION:

Package Dimension:

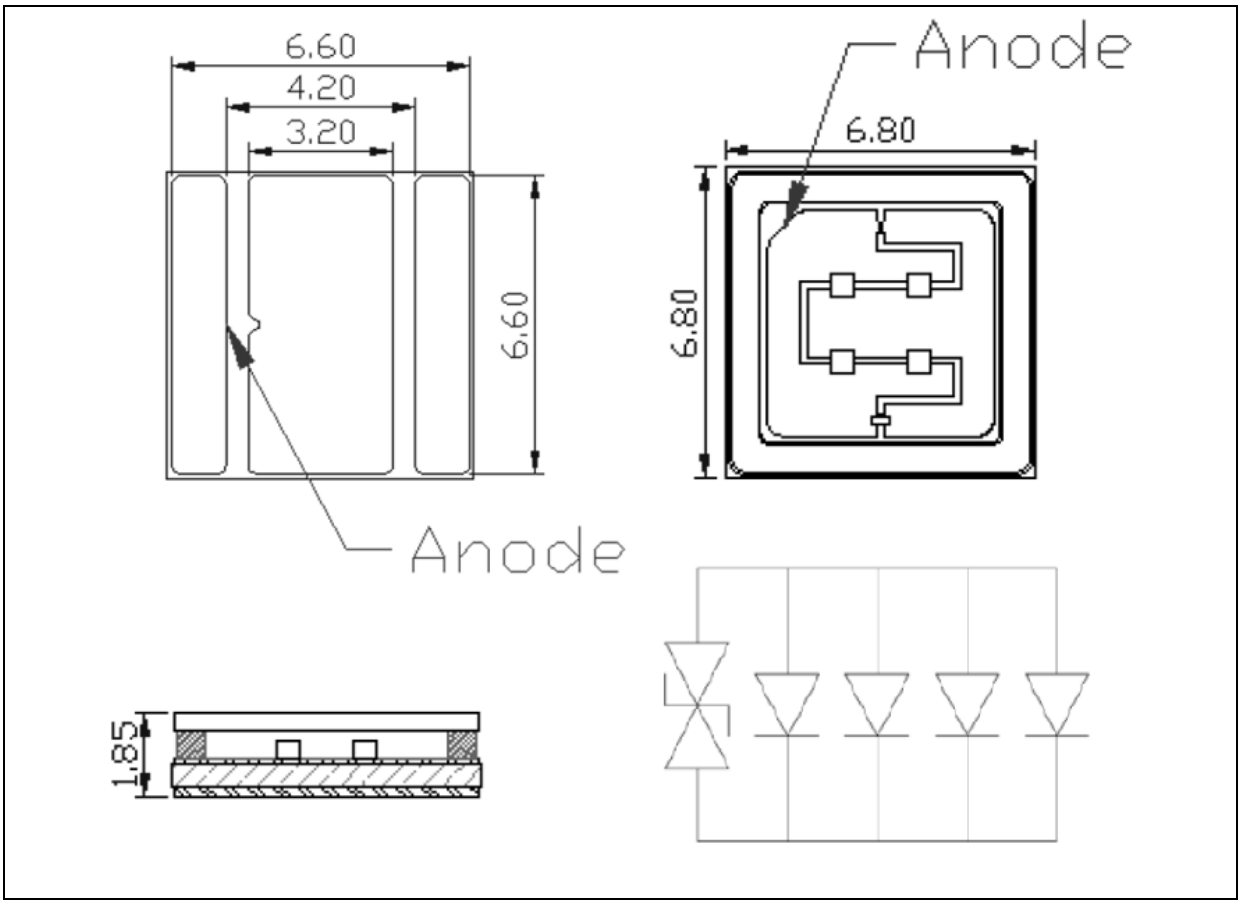

1. All dimensions are in millimetre (mm).
2. Tolerance ±0.13mm, unless otherwise noted.

Recommended Soldering Pad Dimension:

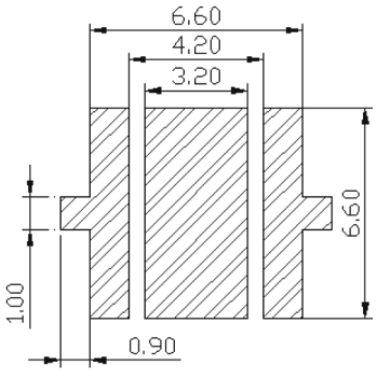

Recommended PCB Solder Pad

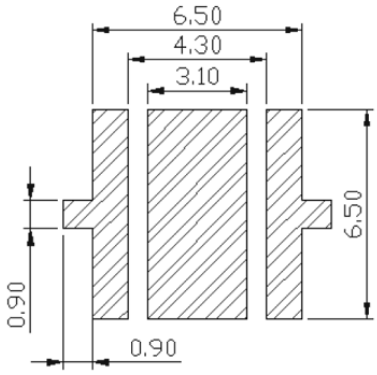

Recommended Stencil Pattern

1. Dimensions are in millimetre (mm).
2. Tolerance ±0.12mm with angle tolerance ±0.5°.

BINNING GROUPS:

Forward Voltage Classifications (I_F = 400mA):

Code	Min.	Max.	Unit
JC	5.0	5.2	V
JD	5.2	5.6	
JE	5.6	6.0	
JF	6.0	6.4	
JG	6.4	6.8	

Radiant Power Classifications (I_F = 400mA):

Code	Min.	Max.	Unit
X06	35	50	mW
X07	50	65	
X08	65	80	

Peak Wavelength Classifications (I_F = 400mA):

Code	Min.	Max.	Unit
265	260	270	nm
275	270	280	

ELECTRO-OPTICAL CHARACTERISTICS:

Relative Luminous Flux v.s. Forward Current

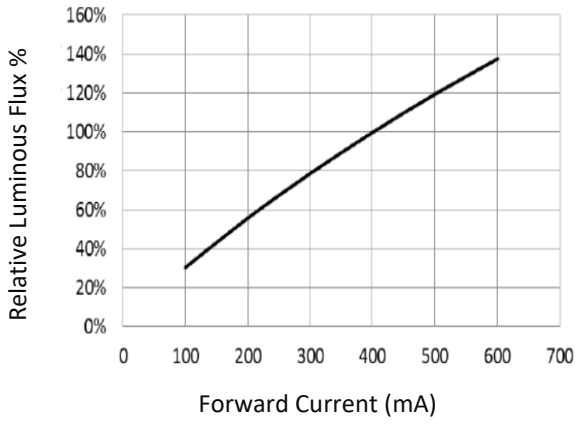

Forward Current v.s. Forward Voltage

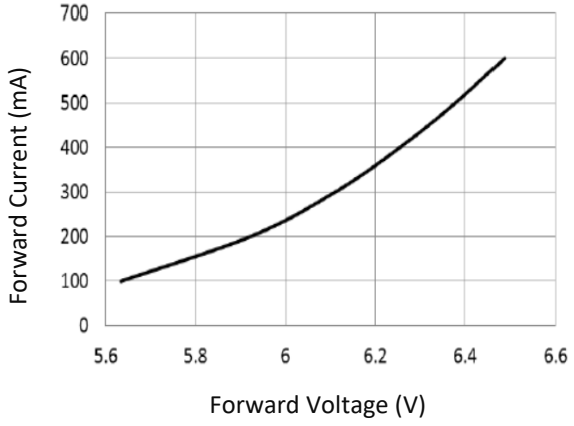

Relative Spectral Power v.s. Wavelength

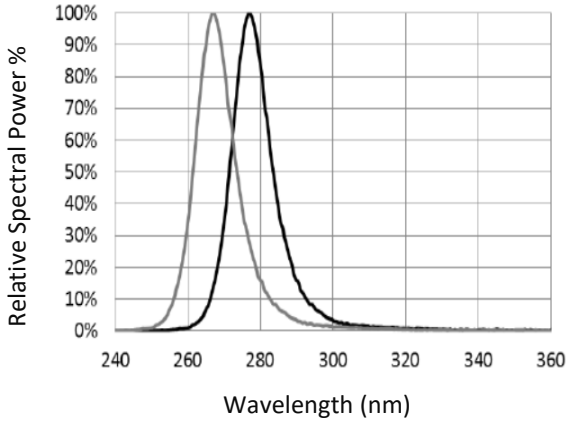

Directive Radiation

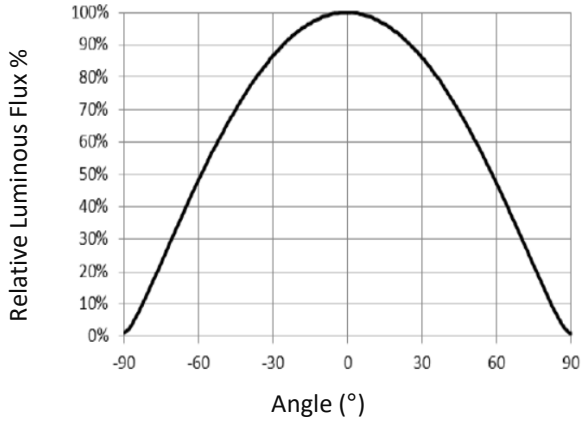

RECOMMENDED SOLDERING PROFILE:

IR Reflow Lead-free Solder:

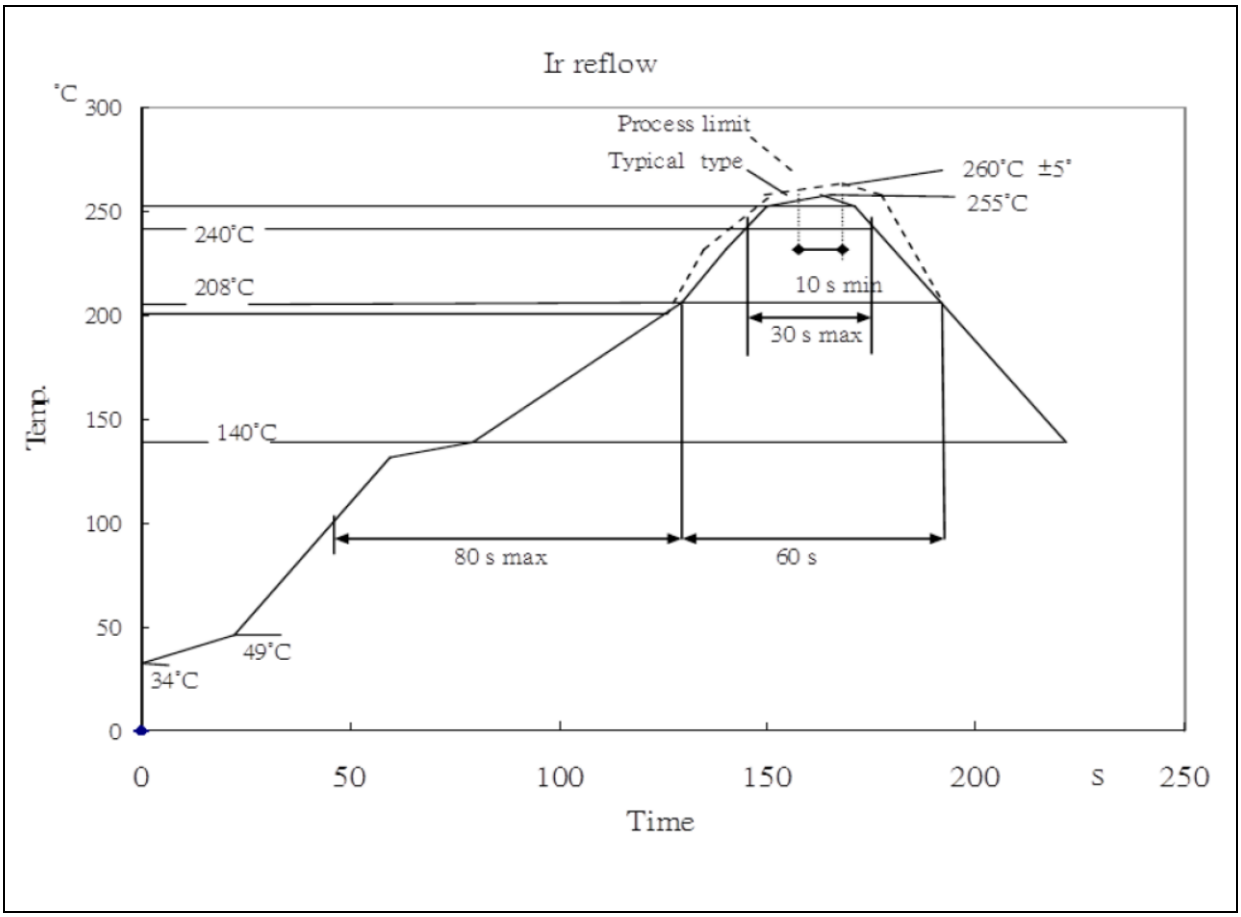

Note:

1. Recommend reflow temperature 240°C. The maximum soldering temperature should be limited to 260°C.
2. Maxima reflow soldering: 1 time.
3. Before, during, and after soldering, should not apply stress on the components and PCB board.

PRECAUTIONS OF USE:

Storage:

It is recommended to store the products in the following conditions:

- Humidity: 60% R.H. Max.
- Temperature: 5°C~30°C (41°F ~86°F).

Shelf life in sealed bag: 12 months at 5°C~30°C and <60% R.H.

Once the package is opened, the products should be used within a week. Otherwise, they should be kept in a damp-proof box with descanting agent <10% R.H. and apply baking.

Baking:

It is recommended to bake the LED before soldering if the pack has been unsealed for longer than 24hrs. The suggested baking conditions are as followings:

- 60±3°C x 24hrs and <5%RH, taped / reel package.

It's normal to see slight color fading of carrier (light yellow) after baking in process.

Testing Circuit:

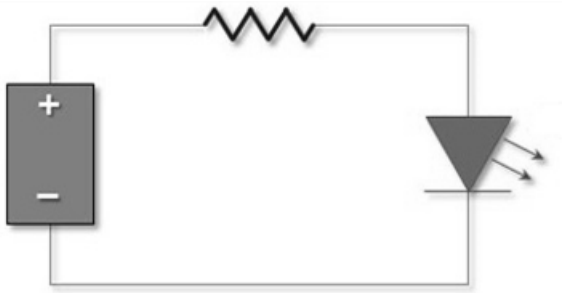

Must apply resistor(s) for protection (over current proof).

Cleaning:

Use alcohol-based cleaning solvents such as isopropyl alcohol to clean the LED carrier / package. Avoid putting any stress force directly on to the LED lens.

ESD (Electrostatic Discharge):

Static Electricity or power surge will damage the LED. Use of a conductive wrist band or anti-electrosatic glove is recommended when handing the LED all time. All devices, equipment, machinery, work tables, and storage racks must be properly grounded.

In the events of manual working in process, make sure the devices are well protected from ESD at any time.

REVISION RECORD:

Version	Date	Summary of Revision
A1.0	30/12/2020	Datasheet set-up.
A1.1	02/03/2021	Update bin table.