CA3T-3UD

Product Code: KWXP-3020XXH2E04-002

Table of Contents

Doc. ID: PKG-DS-099 Rev. B

Date: October 06, 2020

REVISION HISTORY

Rev.	Date	Charged	Approved	Revision Summary
A	2020/09/16	Hurry	Bruce	***First issue***
B	2020/10/6	Hurry	Bruce	**Product photo update**

PRODUCT CHARACTERISTICS (T_j = 25 ˚C; I_F = 350 mA)

Parameter		Values	Unit
Viewing Angle (FWHM)		120	°
Forward voltage	**(min.)**	2.9	V
	(typ.)	3.05	
	(max.)	3.2	
Thermal resistance (Rth)	**(typ.)**	10	K/W
Radiating surface		1.44	mm^2

*Rth is the thermal resistance form junction to case(i.e. back of the LED substrate).

MAXIMUM RATINGS

Parameter		Values	Unit
Operating temperature range		-40 … 125	˚C
Storage temperature range		-40 … 125	˚C
Junction temperature		150	˚C
Forward Current	**(typ.)**	350	mA
	(max.)	700	mA
Reversed voltage		not designed for reversed operation	V

JEDEC MOISTURE SENSITIVITY

Level	Floor Life	
	Time	Conditions
1	unlimited	≦ 30°C / 85 % RH

BRIGHTNESS GROUPS

Item	Group Code	Measured Test Condition 350 mA Pulsed Operation Case Temperature T_c = 25°C Minimum Luminous Flux (lm)	
		White	PC Amber
CA3T-3UD PKG	DE8	140	80
	DE9	140	90
	DEA	140	100
	DF8	150	80
	DF9	150	90
	DFA	150	100
	DG8	160	80
	DG9	160	90
	DGA	160	100
	DH8	170	80
	DH9	170	90
	DHA	170	100

Item	Group Code	Measured Test Condition 350 mA Pulsed Operation Case Temperature T_c = 25°C Minimum Luminous Flux (lm)	
		Blue	PC Amber
CA3T-3UD PKG	D38	30	80
	D39	30	90
	D3A	30	100
	D48	40	80
	D49	40	90
	D4A	40	100
	D58	50	80
	D59	50	90
	D5A	50	100

Item	Group Code	Measured Test Condition 350 mA Pulsed Operation Case Temperature T_c = 25°C Minimum Luminous Flux (lm)	
		White	Blue
CA3T-3UD PKG	DE3	140	30
	DE4	140	40
	DE5	140	50
	DF3	150	30
	DF4	150	40
	DF5	150	50
	DG3	160	30
	DG4	160	40
	DG5	160	50
	DH3	170	30
	DH4	170	40
	DH5	170	50

Notes:
• GPI maintains a tolerance of ±7% on flux
• Calculated flux values are for reference only

PERFORMANCE GROUPS – CHROMATICITY

Color	Chromaticity Region	x	y
White	M10	0.3200	0.3511
		0.3108	0.3440
		0.3108	0.3050
		0.3200	0.3141
	M20	0.3200	0.3511
		0.3290	0.3581
		0.3290	0.3231
		0.3200	0.3141
	M30	0.3290	0.3581
		0.3380	0.3650
		0.3360	0.3300
		0.3290	0.3231
Amber	PCA	0.5763	0.4054
		0.5901	0.4094
		0.5601	0.4390
		0.5469	0.4249
Color	**Wavelength Region**	**Minimum Wavelength (nm)**	**Maximum Wavelength (nm)**
Blue	460	460	465
	465	465	470

Item	Group Code	Chromaticity Region	
		White	Amber
CA3T-3UD (White+Amber)	P10	M10	PCA
	P20	M20	PCA
	P30	M30	PCA
Item	**Group Code**	**Chromaticity Region**	
		Amber	**Blue**
CA3T-3UD (Amber+Blue)	R01	PCA	450
	R02	PCA	455
	R03	PCA	460
	R04	PCA	465

Item	Group Code	Chromaticity Region	
		White	Blue
CA3T-3UD (White+Blue)	O11	M10	450
	O21	M20	450
	O31	M30	450
	O12	M10	455
	O22	M20	455
	O32	M30	455
	O13	M10	460
	O23	M20	460
	O33	M30	460
	O14	M10	465
	O24	M20	465
	O34	M30	465

Notes:
•GPI maintains a tolerance of ±0.005 on chromaticity (CCx, CCy) measurements
•GPI maintains a tolerance of ±0.05 on wavelength (λ) measurements

TYPICAL SPATIAL DISTRIBUTION

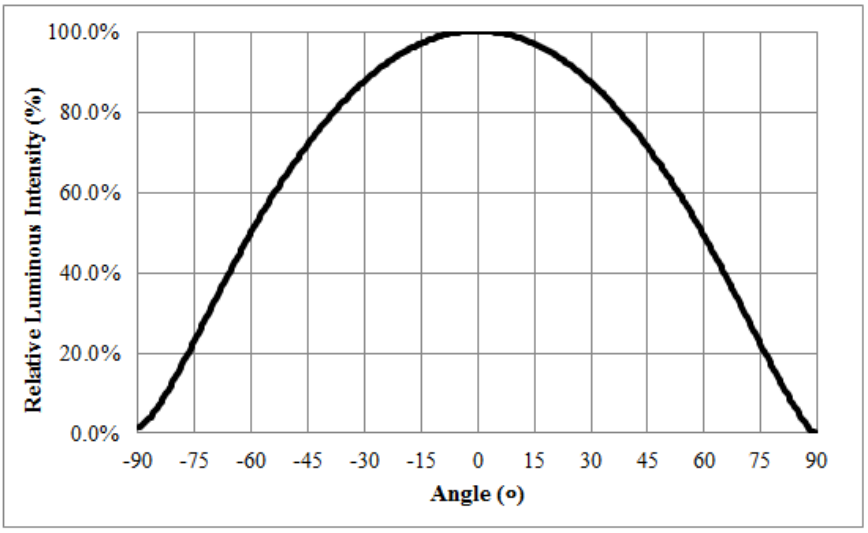

RELATIVE LUMINOUS FLUX VS. CURRENT (T_B = 25 °C)

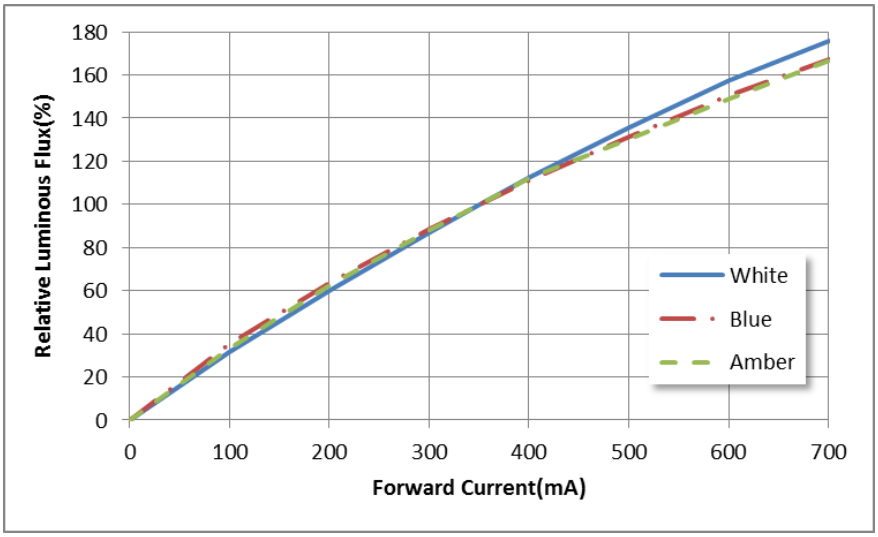

RELATIVE LUMINOUS FLUX VS. TEMPERATURE (I_F = 350 mA)

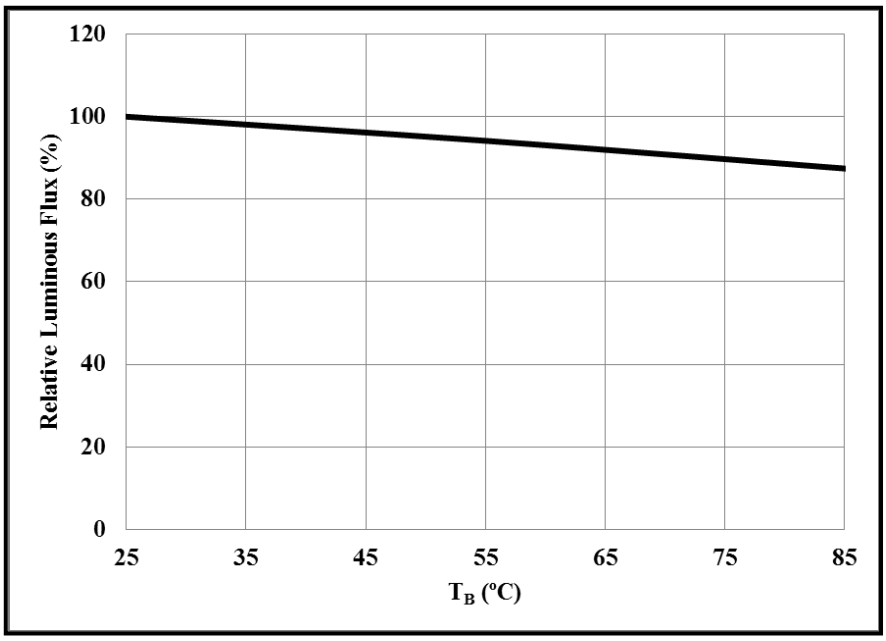

FORWARD VOLTAGE VS. FORWARD CURRENT (T_B = 25 °C)

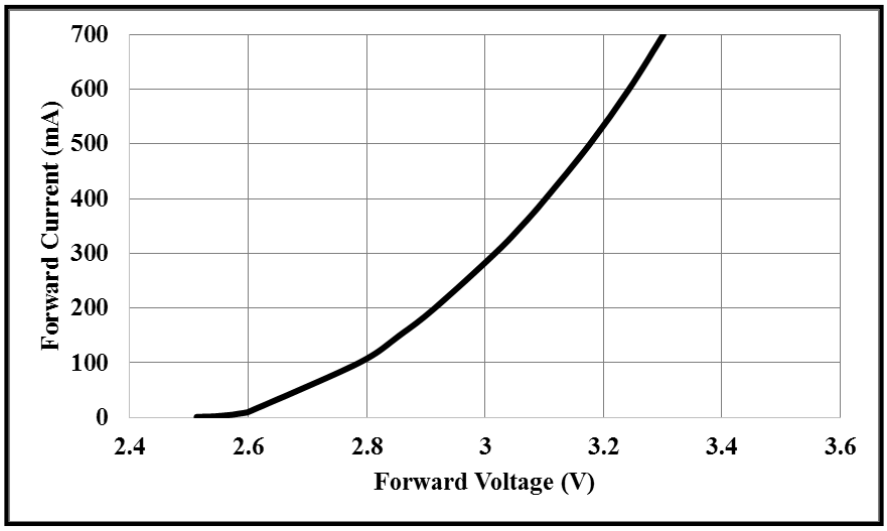

CHROMATICITY DIAGRAM

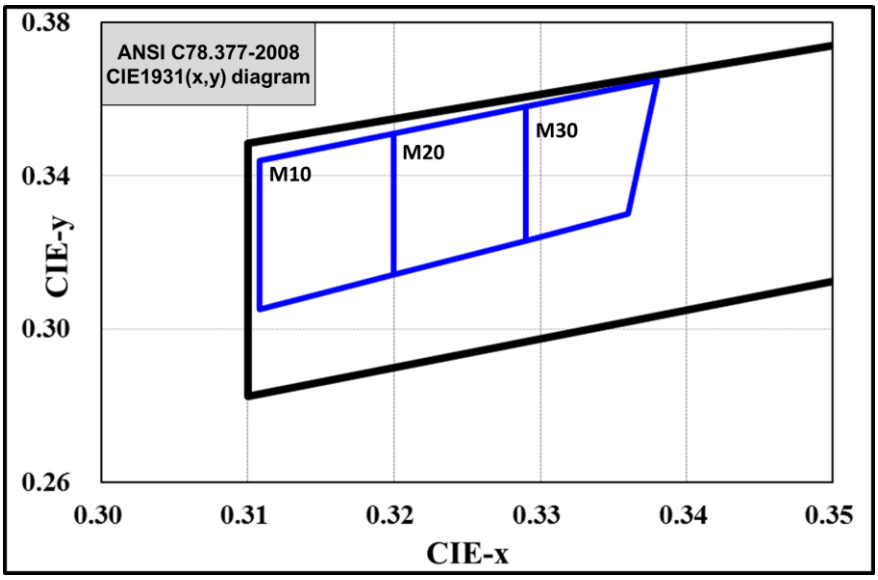

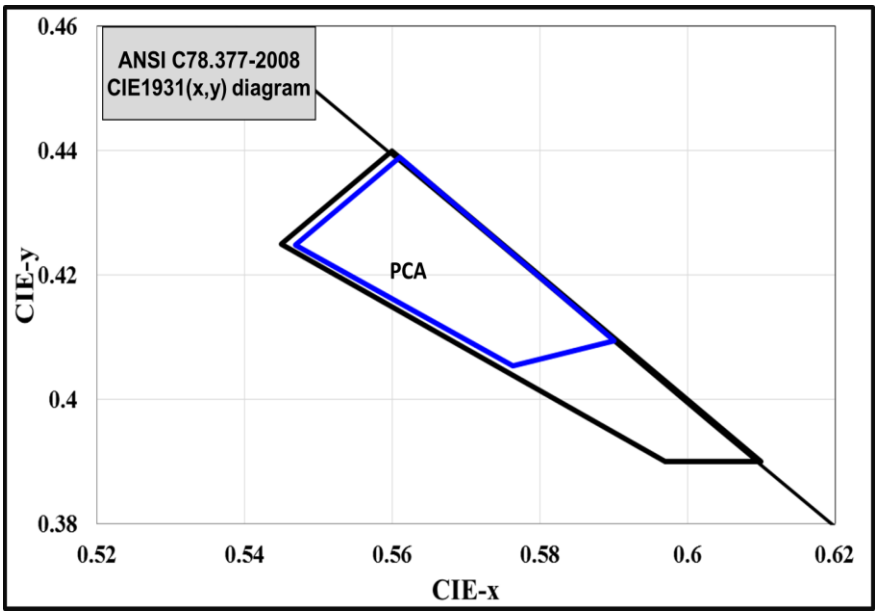

RELIABILITY

Test Item	Test Conditions		Test Period	Ac/Re
Room Temperature Operating Life（RTOL）	TA=25℃；IF=350mA DC		1000hrs	0/1
Wet High Temperature Operating Life（WHTOL）	TA=85°C；85% humidity IF=350mA DC		1000hrs	0/1
High Temperature Operating Life（HTOL）	TA=85°C；IF=350mA DC		1000hrs	0/1
Thermal Cycle	-40℃	125℃	1000 cycle	0/1
	30min	30 min		
Reflow Soldering	Tmax.=260℃		3 times	0/1

Notes:
- No catastrophic (LED Fail)
- Lumen maintenance > 85%
- Change in Vf < 10%
- Change in white color point ∆x ∆y ± 0.01
- No corrosion
- Moisture Sensitivity Level 2 (IPC/JEDEC J-STD-020)

REFLOW SOLDERING CHARACTERISTICS

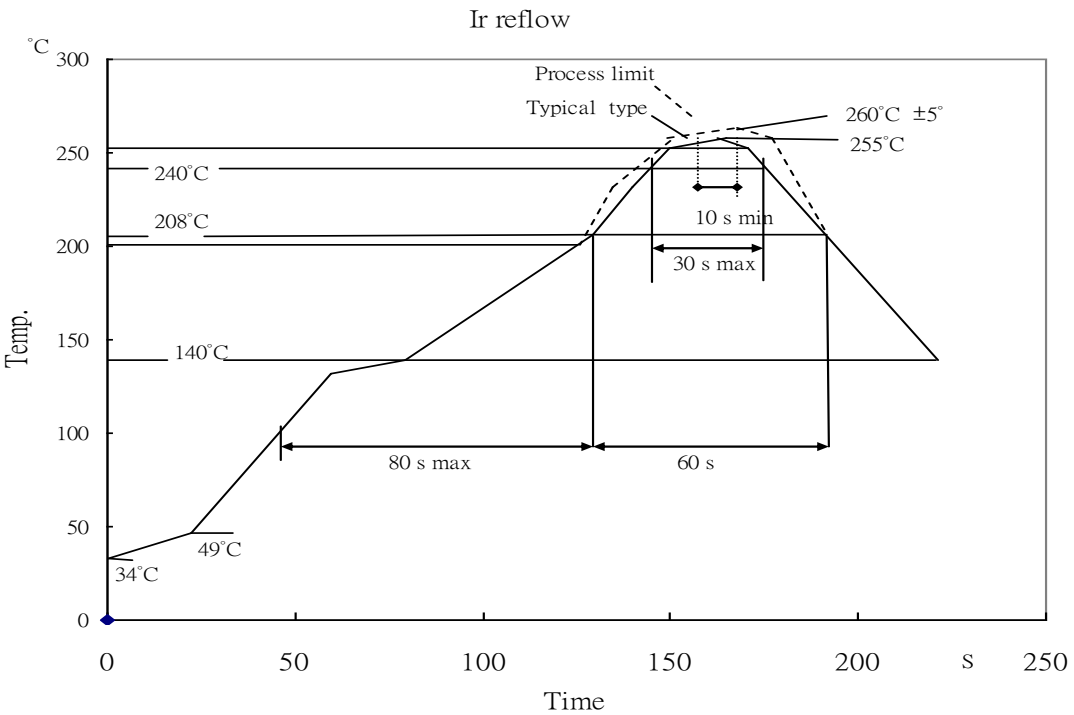

MECHANICAL DIMENSIONS

All measurements are ±.10 mm unless otherwise indicated.

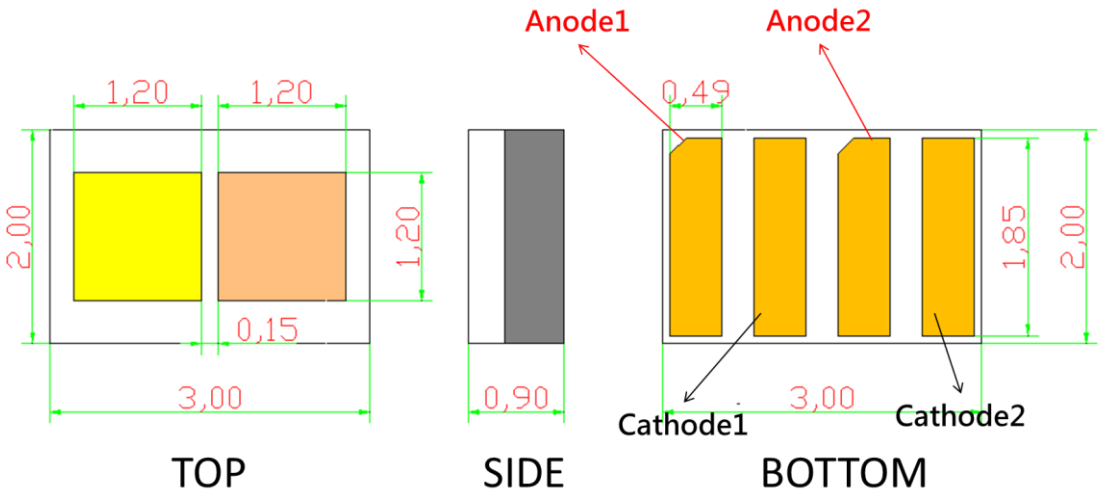

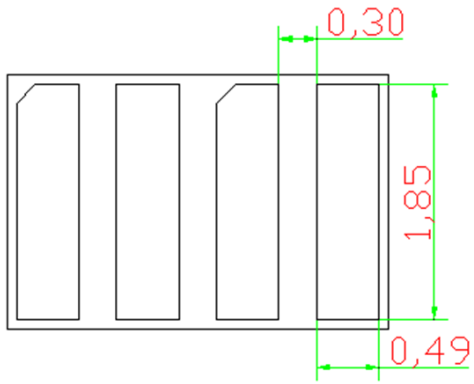

Recommended Soldering Pad Pattern

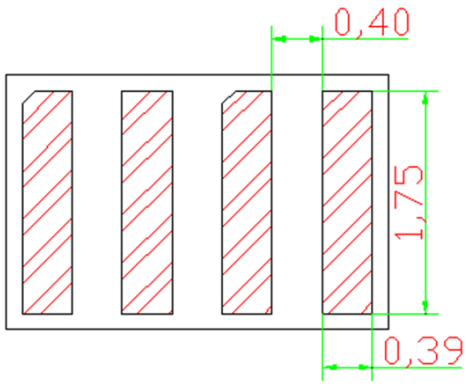

Recommended Metal Solder Stencil Aperture

Unit: mm

INTERNAL ELECTRICAL CIRCUIT

TAPE AND REEL

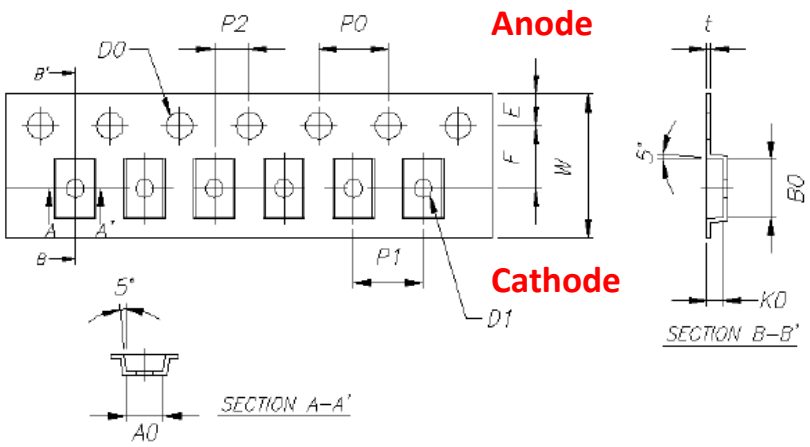

Item	Specification	Tol. (+/-)
W	**8.00**	± 0.20
E	**1.75**	± 0.10
F	**3.50**	± 0.05
D0	**1.50**	+0.10, -0
D1	**1.00**	± 0.10
P0	**4.00**	± 0.05
P1	**4.00**	± 0.10
P2	**2.00**	± 0.05
P0 x 10	**40.00**	± 0.20

t	**0.23**	± 0.05
A0	**2.19**	± 0.10
B0	**3.24**	± 0.10
K0	**0.95**	± 0.05

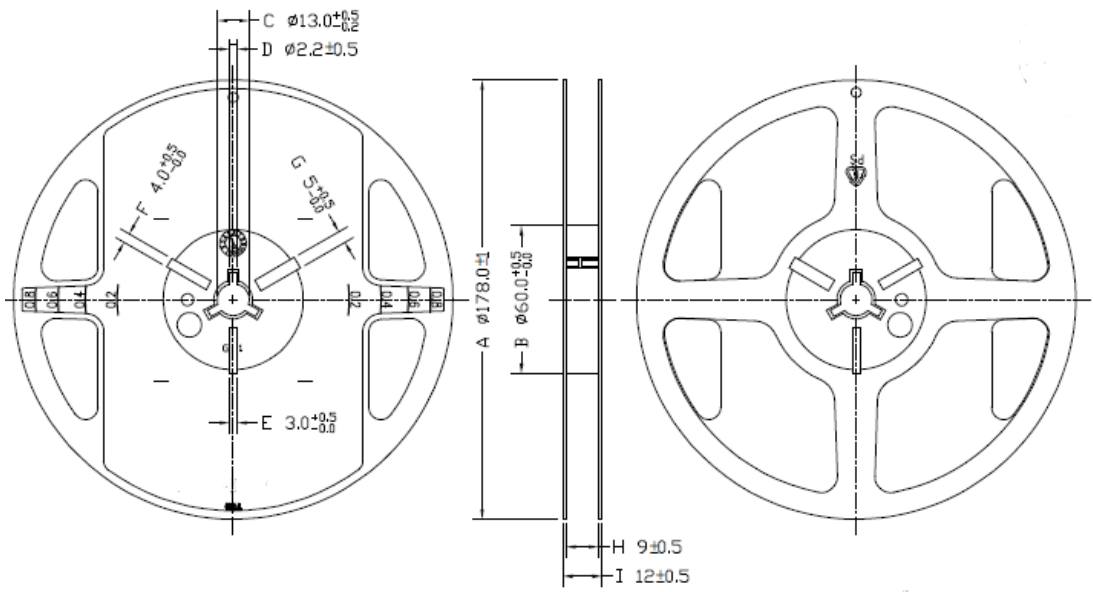

unit:mm

Note:

1. Quantity : minimum 1000 pcs/reel, Maximum 2000 pcs/reel

PACKING

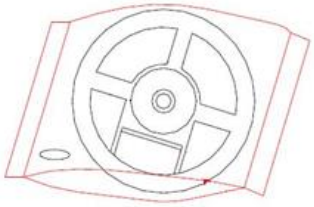

1 Anti-Static Reel in 1 Moistureproof Foil Bag.

(Within Moisture Absorbent Material)

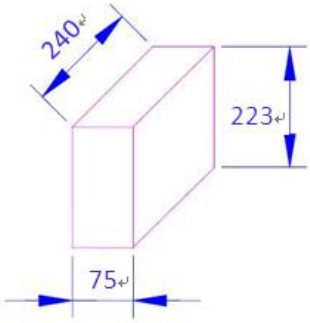

4 Moistureproof Foil Bag in 1 Inner Box.

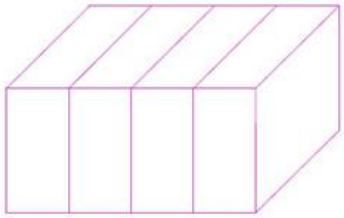

4 Inner Box in 1 Carton.

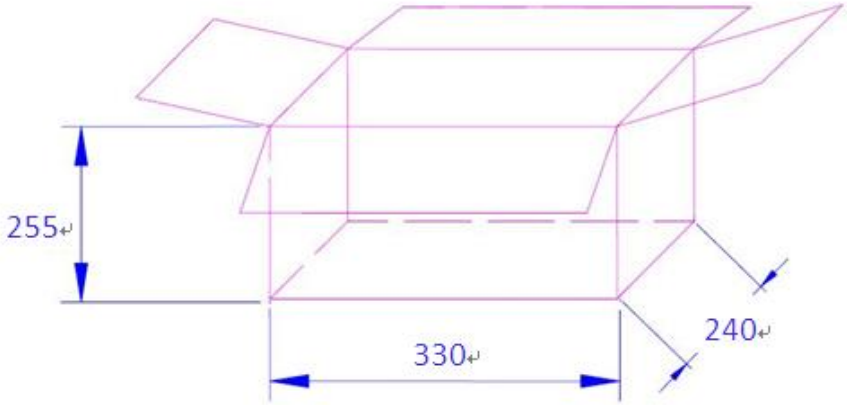

CAUTIONS

1. Moisture Sensitivity

In testing, GPI has found CA3T-3UD LEDs to have 1 year floor life in condition <=30C/ 85% relative humidity (RH). Moisture testing included a 168-hr soak at 85C/60% RH followed by 3 times reflow cycles, with visual and electrical inspections at each stage.

GPI recommends keeping CA3T-3UD LEDs in their sealed moisture-barrier packaging until immediately prior to use. GPI also recommends returning any unusual LEDs to the re-sealable moisture-barrier bag and closing the bag immediately after use.

2. Handling Precautions

Do not handle LEDs with bare hands, it may contaminate the LED surface and affect optical characteristics. In the worst case, catastrophic failure from excess pressure through wire-bond breaks and package damage may result.

Do not stack assembled PCBs together. Failure to comply can cause the resin portion of the product to be cut, chipped, delaminated and/or deformed. It may cause wire to break, leading to catastrophic failures.

3. Eye safety

Warning: do not look at exposed lamp in operation. Eye injury can result.

4. Static Electricity

Wristbands and anti-electrostatic gloves are strongly recommended and all devices, equipment and machinery must be properly grounded when handling the LEDs, which are sensitive against static electricity and surge.
Precautions are to be taken against surge voltage to the equipment that mounts the LEDs. Unusual characteristics such as significant increase of current leakage, decrease of turn-on voltage or non-operation at a low current can occur when the LED is damaged.