CA18-9X2

Product Code: KWXP-1818xxG

Table of Contents

REVISION HISTORY

Rev.	Date	Charged	Approved	Revision Summary
Beta	2020/10/19	Frank	Bruce	***First issue***

ABSOLUTE MAXIMUM RATING

Characteristics	Value	Unit
DC Forward Current	350	mA
Power Dissipation	3.5	W
DC Reverse Voltage	15	V
Storage Temperature	-40 ~ 125	℃
Operating Temperature	-40 ~ 125	℃
LED Junction Temperature	150	℃

PRODUCT CHARACTERISTICS

Characteristics	Unit	minimum	Typ.	Maximum
Thermal resistance, junction to solder point	℃/W		10	
Viewing Angle (FWHM)	degrees		115	
Temperature coefficient of voltage	mV/℃		-2.5	
DC Forward Current	mA		300	350
Reverse Voltage	V			15
Forward Voltage(@300mA)	V		9.5	10
LED junction temperature	℃			150

FLUX CHARACTERISTICS

Color	CCT		Base Order codes Minimum Luminous Flux (lm)		Calculated Minimum Luminous Flux (lm)*	Order Code
	Min	Max	Group	@ 300mA	350mA	
Ra 70, Cool White	5400K	8000K	E17	330	372	KWXP-1818C7G
			E18	350	395	
Ra80 Natural White	4700K	5300K	E15	290	327	KWXP-1818C8G
			E16	310	350	
Ra 80, Natural White	3700K	4200K	E15	290	327	KWXP-1818N8G
			E16	310	350	
Ra 80 Warm White	2600K	3200K	E13	250	282	KWXP-1818W8G
			E14	270	305	
			E15	290	327	
Ra90, Cool White	5400K	6000K	E13	250	282	KWXP-1818C9G
			E14	270	305	
Ra95, Warm White	2800K	3200K	E12	230	259	KWXP-1818WCG
			E13	250	282	
Ra65 Gold White	1750K	2400K	E12	230	259	KWXP-1818G6G
			E13	250	282	

Notes:
• GPI maintains a tolerance of ±5% on flux and power measurements, ±0.005 on chromaticity (CCx, CCy) measurements and ±2 on Ra measurements.
• Calculated flux values are for reference only.

RELATIVE SPECTRAL POWER DISTRIBUTION

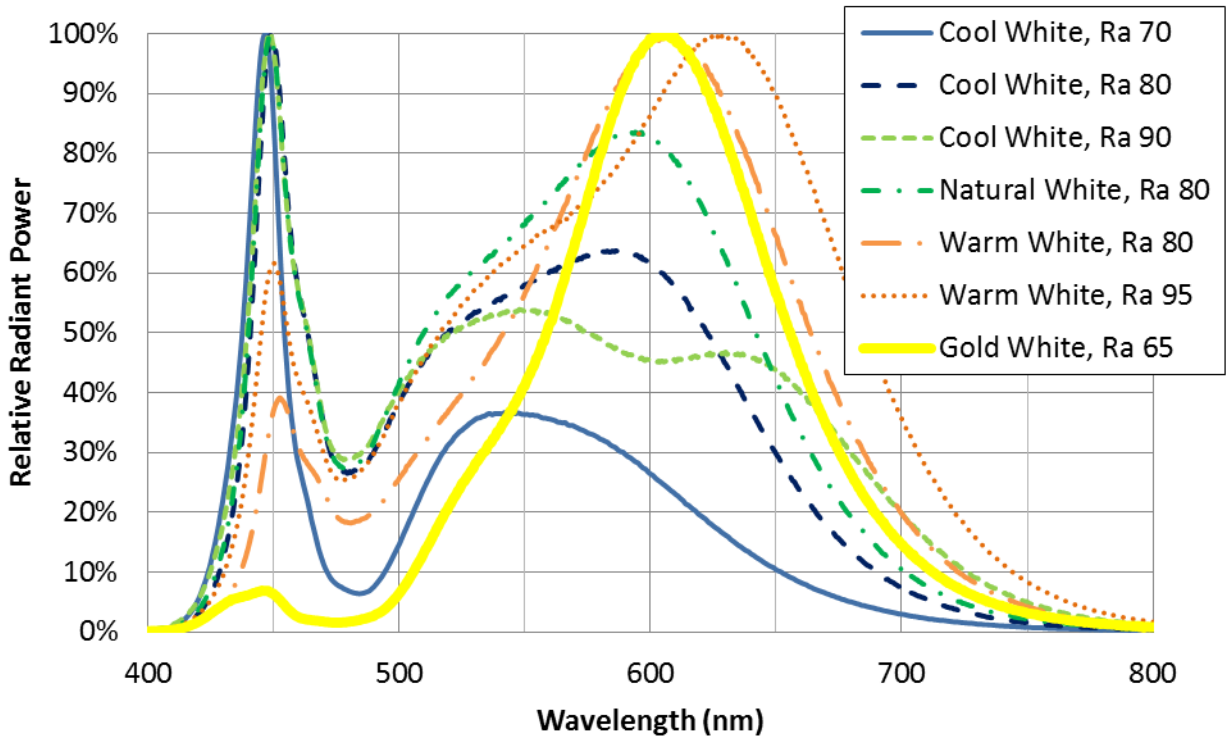

ELECTRICAL CHARACTERISTIC

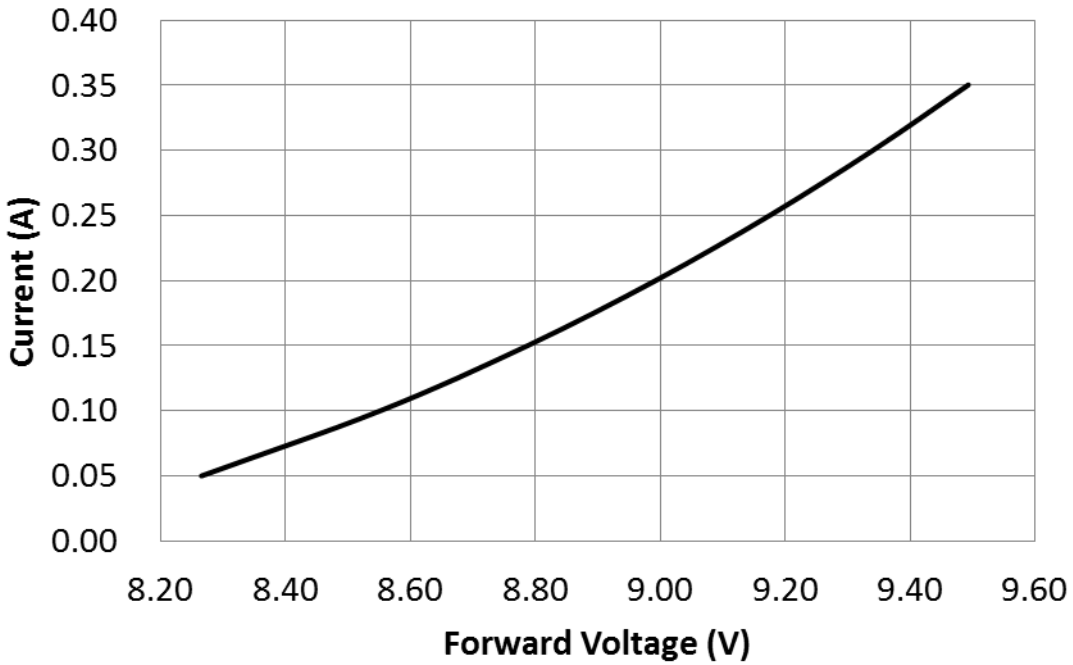

RELATIVE LUMINOUS FLUX VS. CURRENT

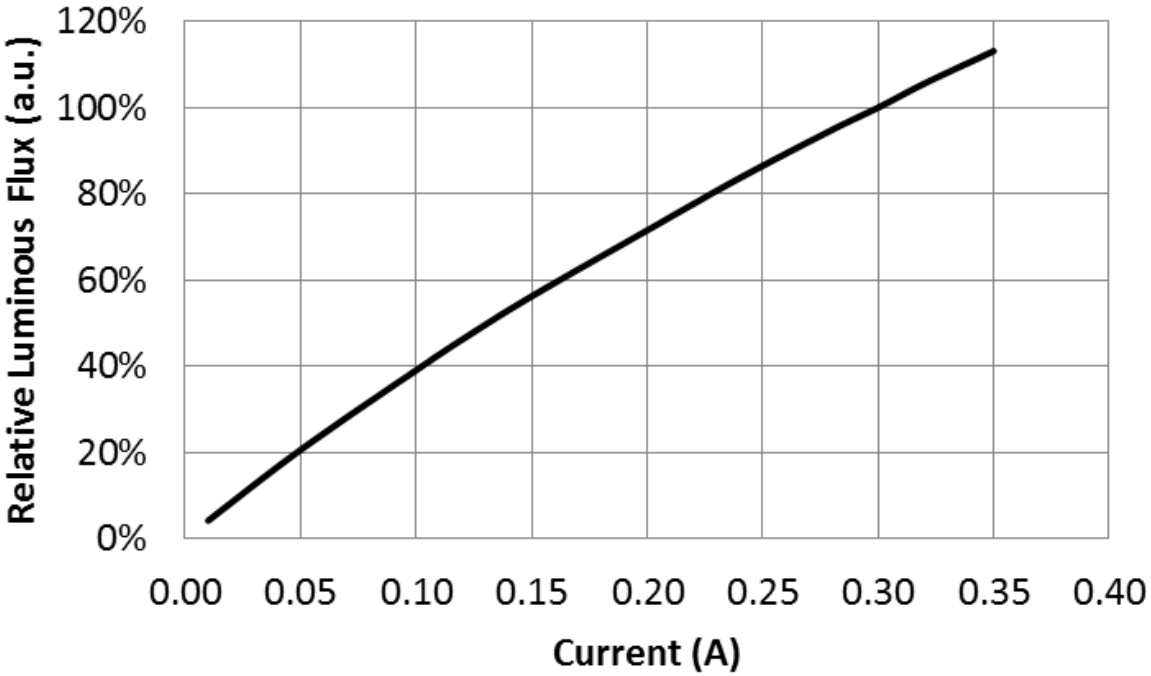

TYPICAL SPATIAL DISTRIBUTION

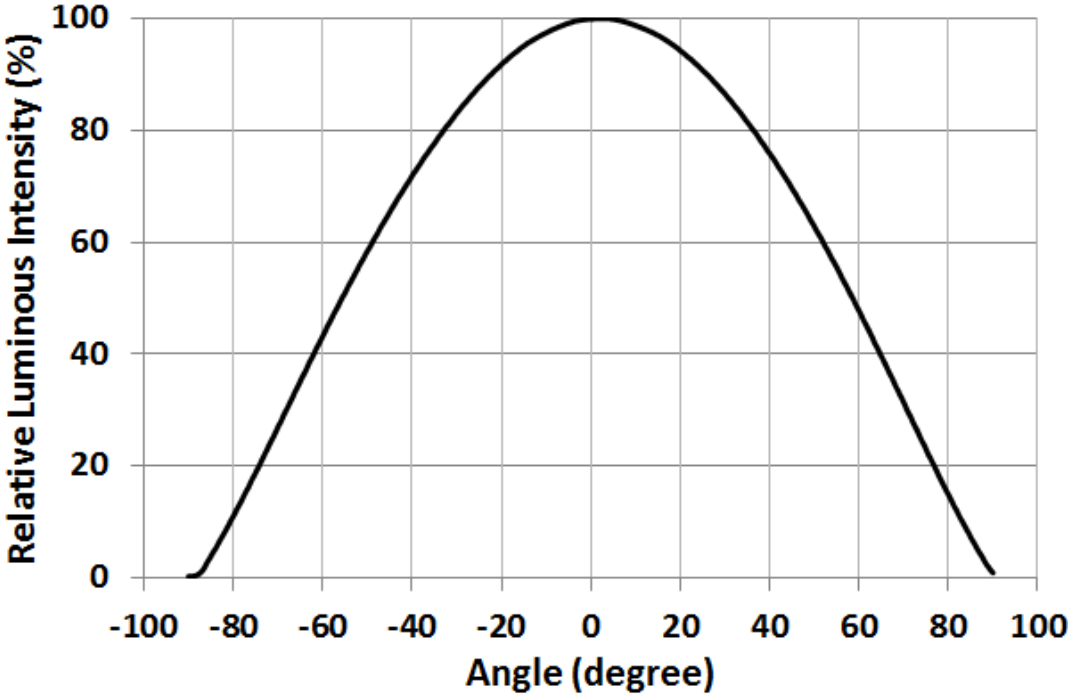

RELATIVE LUMINOUS INTENSITY V.S. TEMPERATURE (I=300mA)

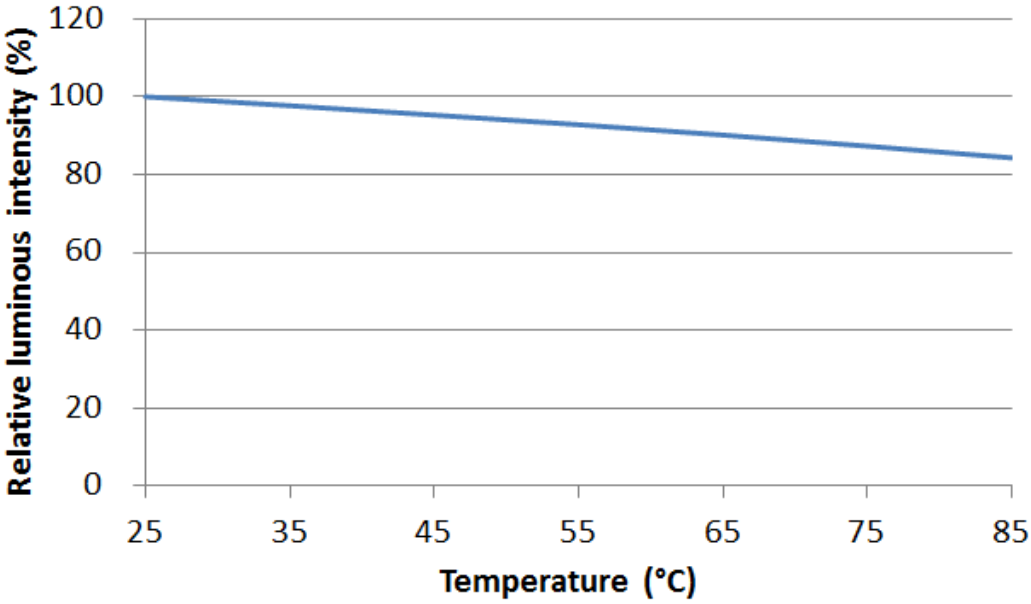

PERFORMANCE GROUPS – BRIGHTNESS

Group code	Min. Luminous Flux (lm)	Max. Luminous Flux (lm)
E12	230	250
E13	250	270
E14	270	290
E15	290	310
E16	310	330
E17	330	350
E18	350	370

PERFORMANCE GROUPS –FORWARD VOLTAGE

Group code	Minimum Forward Voltage (V)	Maximum Forward Voltage (V)
BQ	8.8	9.1
BR	9.1	9.4
BS	9.4	9.7
BT	9.7	10.0
BU	10.0	10.3

PERFORMANCE GROUPS – CHROMATICITY

Bin Code	Sub-bin	x	y
65	65A	0.3048	0.3207
		0.313	0.329
		0.3144	0.3186
		0.3068	0.3113
	65B	0.3028	0.3304
		0.3115	0.3391
		0.313	0.329
		0.3048	0.3207

Bin Code	Sub-bin	x	y
65	65C	0.3115	0.3391
		0.3205	0.3481
		0.3213	0.3373
		0.313	0.329
	65D	0.313	0.329
		0.3213	0.3373
		0.3221	0.3261
		0.3144	0.3186

Bin Code	Sub-bin	x	y
57	57A	0.3215	0.3350
		0.3290	0.3417
		0.3290	0.3300
		0.3222	0.3243
	57B	0.3207	0.3462
		0.3290	0.3538
		0.3290	0.3417
		0.3215	0.3350

Bin Code	Sub-bin	x	y
57	57C	0.3290	0.3538
		0.3376	0.3616
		0.3371	0.3490
		0.3290	0.3417
	57D	0.3290	0.3417
		0.3371	0.3490
		0.3366	0.3369
		0.3290	0.3300

Bin Code	Sub-bin	x	y
22	22A	0.4921	0.4156
		0.4798	0.3967
		0.4898	0.3971
		0.5020	0.4156
	22B	0.5044	0.4344
		0.4921	0.4156
		0.5020	0.4156
		0.5155	0.4347

Bin Code	Sub-bin	x	y
22	22C	0.5155	0.4347
		0.5020	0.4156
		0.5132	0.4163
		0.5265	0.4350
	22D	0.5020	0.4156
		0.4898	0.3971
		0.4998	0.3975
		0.5132	0.4163

PERFORMANCE GROUPS – CHROMATICITY – CONTINUED

Bin Code	Sub-bin	x	y
20	20A	0.5123	0.415
		0.4998	0.3975
		0.5142	0.3967
		0.5270	0.413
	20B	0.5265	0.435
		0.5123	0.415
		0.527	0.413
		0.5423	0.4339

Bin Code	Sub-bin	x	y
20	20C	0.5423	0.4339
		0.5580	0.4328
		0.5403	0.4107
		0.5270	0.4130
	20D	0.5270	0.4130
		0.5142	0.3967
		0.5285	0.3959
		0.5403	0.4107

Bin Code	Sub-bin	x	y
18	18A	0.5285	0.3959
		0.5403	0.4107
		0.5560	0.4073
		0.5450	0.3935
	18B	0.5403	0.4107
		0.5580	0.4328
		0.5682	0.4225
		0.5560	0.4073

CCT	Mac Adam ellipse	Center x	Center y	a	b	theta
7500K	3-step	0.2988	0.3144	0.006021	0.002565	70
	5-step	0.2988	0.3144	0.01004	0.00428	70
6500K	3-step	0.3123	0.3282	0.00669	0.00285	58.57
	5-step	0.3123	0.3282	0.01115	0.00475	58.57
5700K	3-step	0.3287	0.3417	0.00746	0.0032	59.09
	5-step	0.3287	0.3417	0.01243	0.00533	59.09
5000K	3-step	0.3447	0.3553	0.00822	0.00354	59.62
	5-step	0.3447	0.3553	0.0137	0.0059	59.62
4000K	3-step	0.3818	0.3797	0.00939	0.00402	53.72
	5-step	0.3818	0.3797	0.01565	0.00670	53.72
3000K	3-step	0.4338	0.403	0.00834	0.00408	53.22
	5-step	0.4338	0.403	0.0139	0.0068	53.22
2700K	3-step	0.4578	0.4101	0.0081	0.0042	53.7
	5-step	0.4578	0.4101	0.0135	0.007	53.7

GPI's STANDARD WHITE CHROMATICITY REGINS PLOTTED ON THE 1931 CIE CURVE

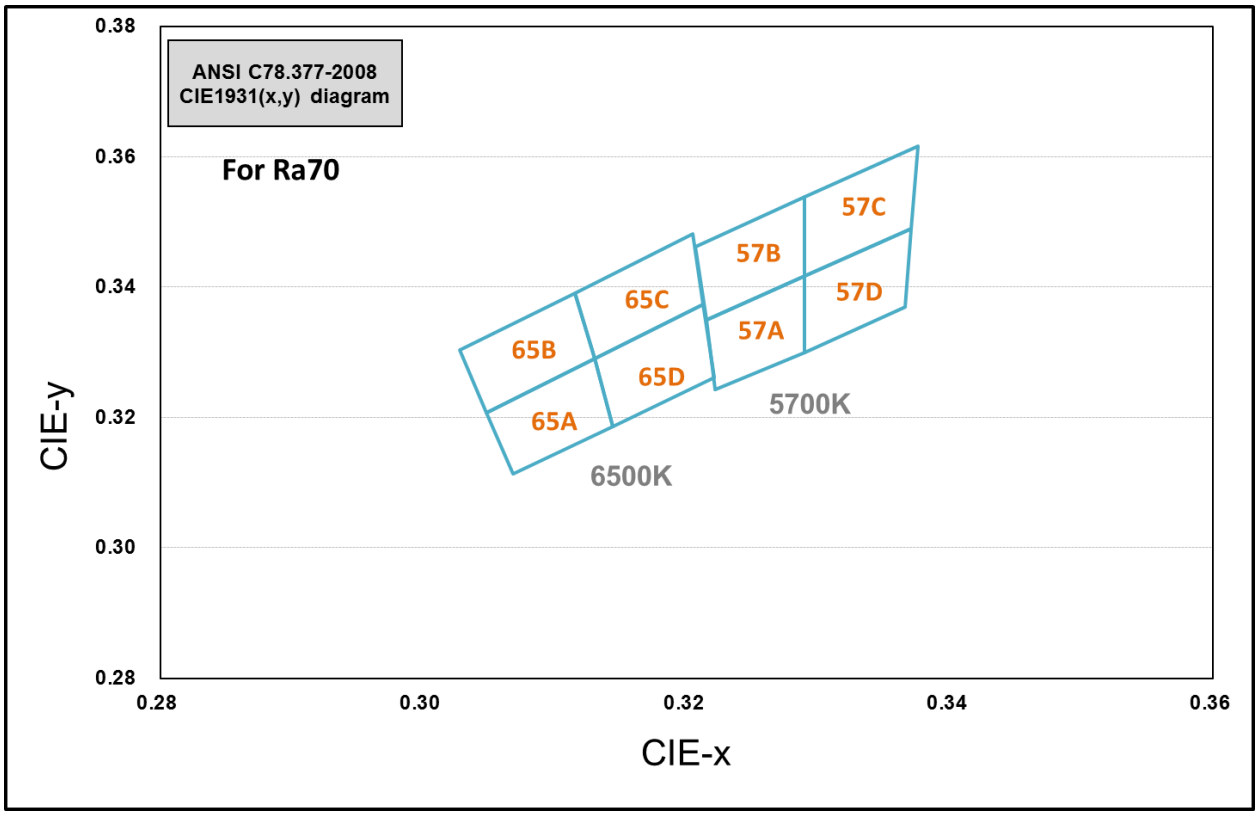

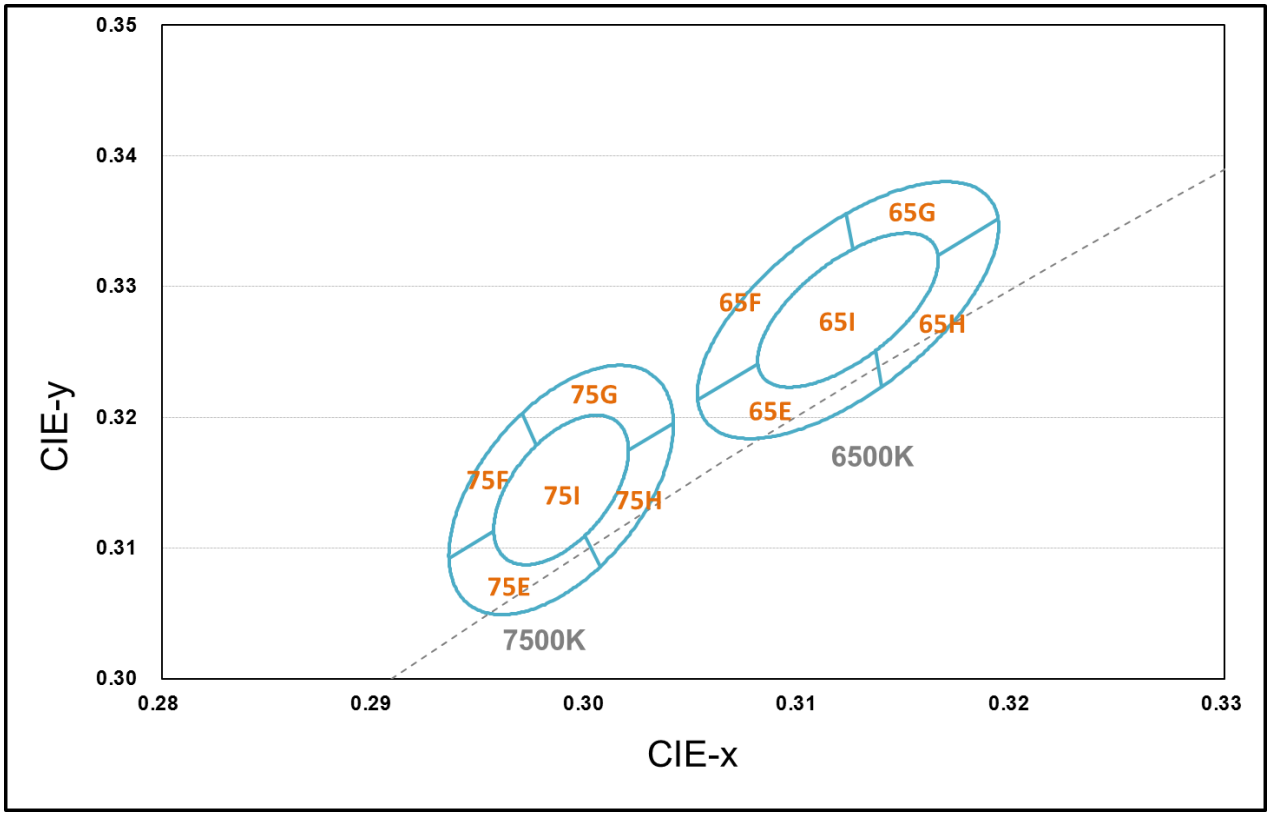

GPI's STANDARD WHITE CHROMATICITY REGINS PLOTTED ON THE 1931 CIE CURVE– CONTINUED

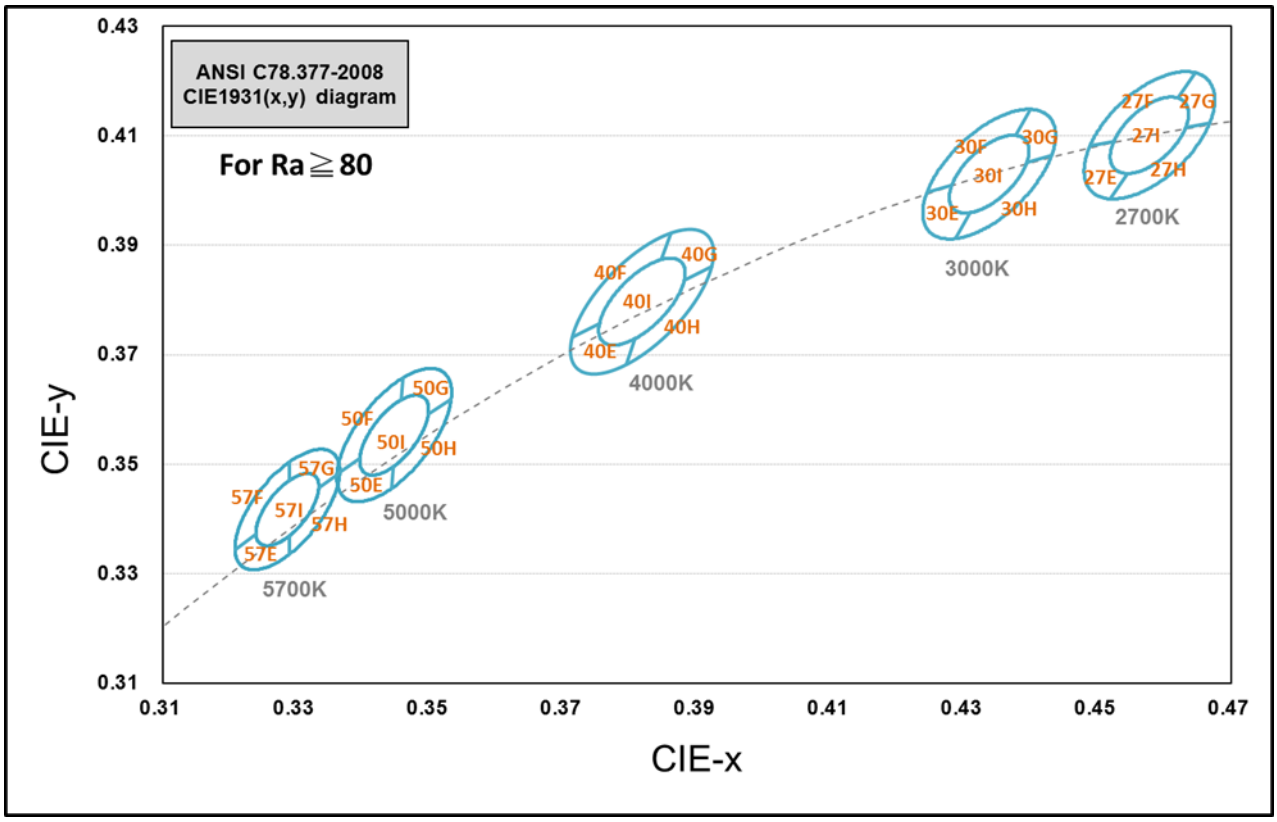

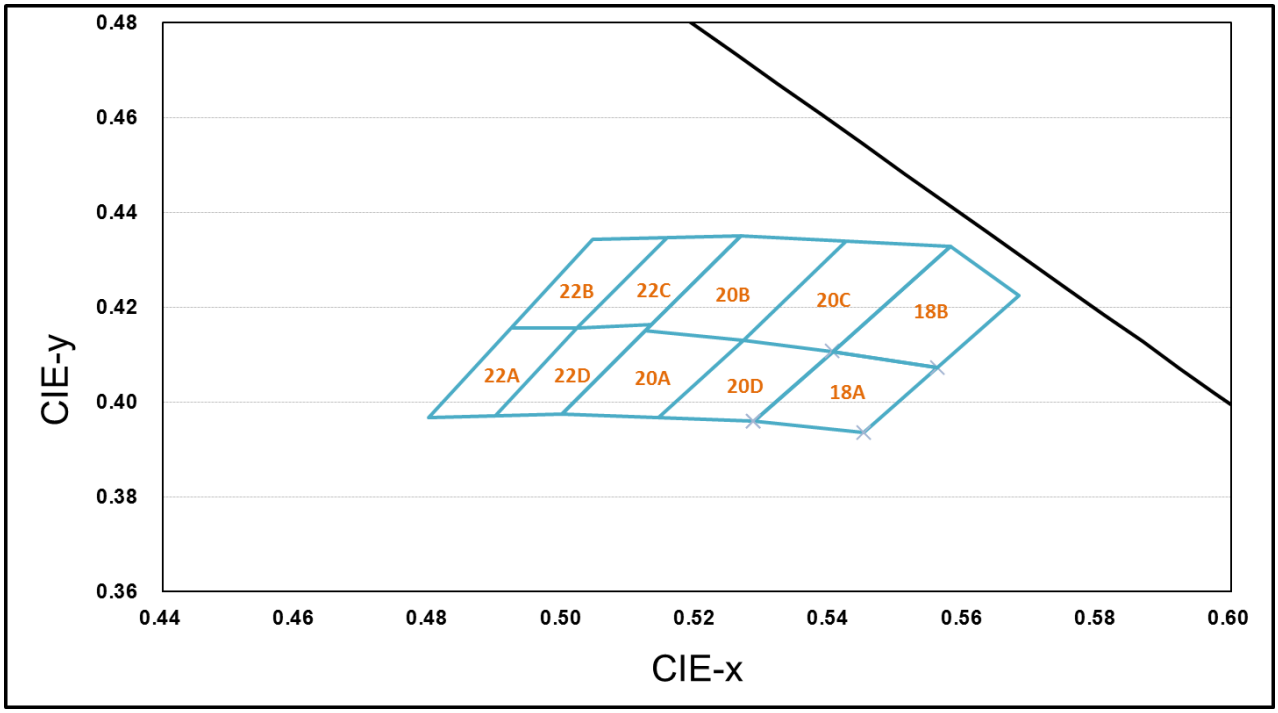

RELIABILITY

Test Item	Test Conditions		Test Period	Ac/Re
Room Temperature Operating Life（RTOL）	IF=300mA DC		1000hrs	0/1
Wet High Temperature Operating Life（WHTOL）	TA=85°C；85% humidity IF=300mA DC		1000hrs	0/1
High Temperature Operating Life（HTOL）	TA=85°C；IF=300mA DC		1000hrs	0/1
Thermal Cycle	-40℃	125℃	1000 cycle	0/1
	30min	30 min		
Reflow Soldering	Tmax.=260℃		3 times	0/1

Notes:
- No catastrophic (LED Fail)
- Lumen maintenance > 90%
- Change in Vf < 10%
- Change in white color point △x △y ± 0.01
- No corrosion
- Moisture Sensitivity Level 2 (IPC/JEDEC J-STD-020)

Reflow Soldering Characteristics

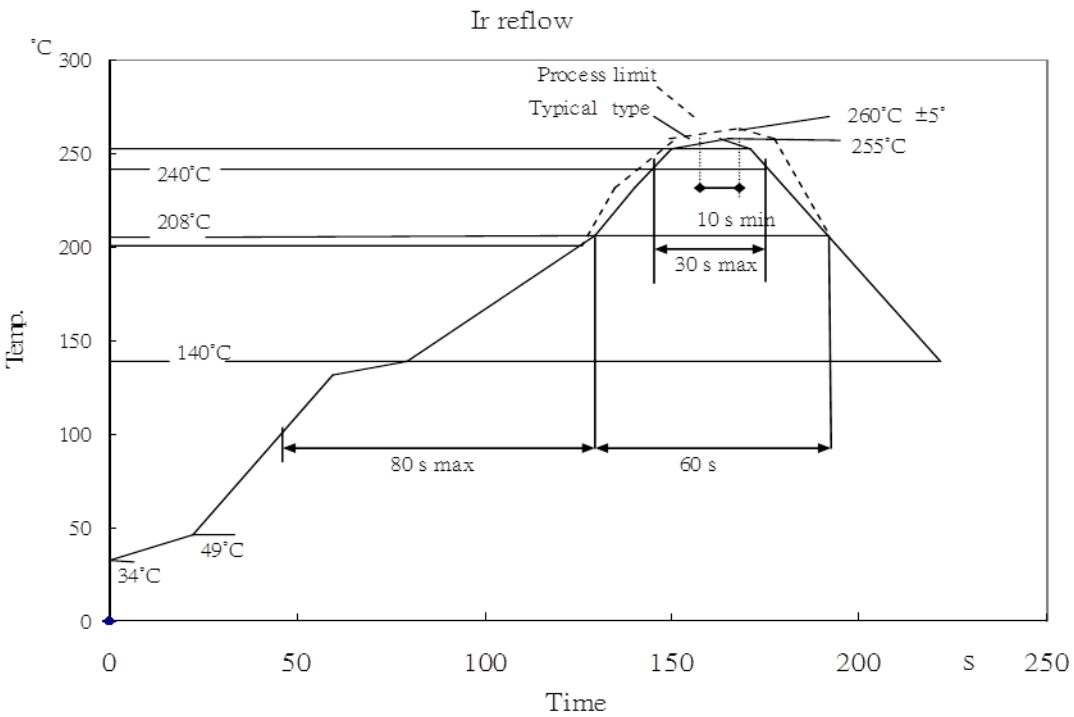

MECHANICAL DIMENSIONS

Bottom Layout

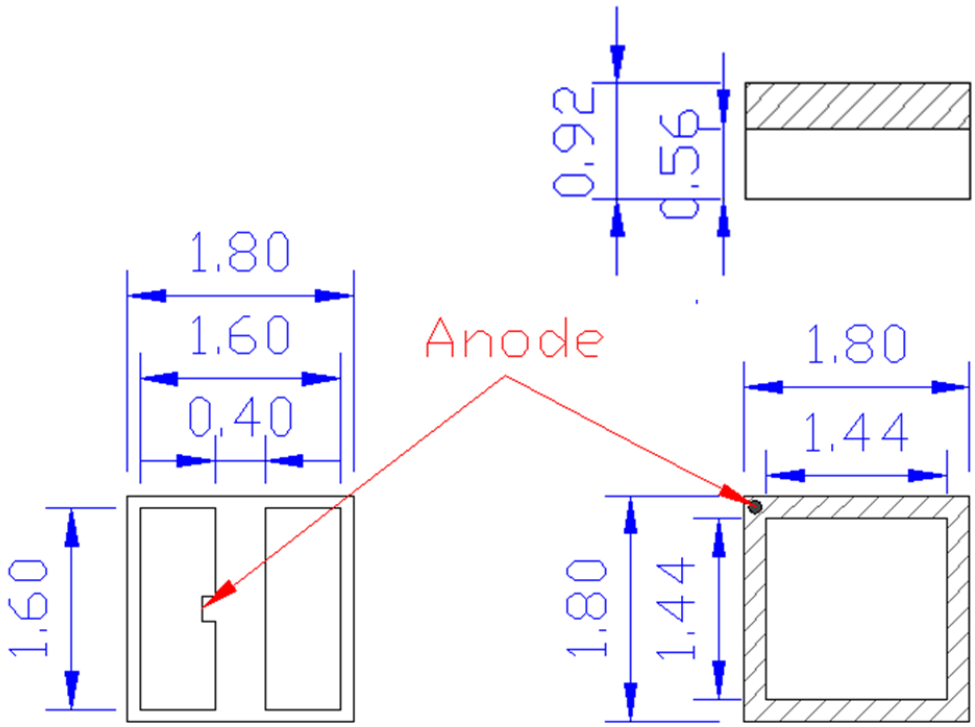

Dimension

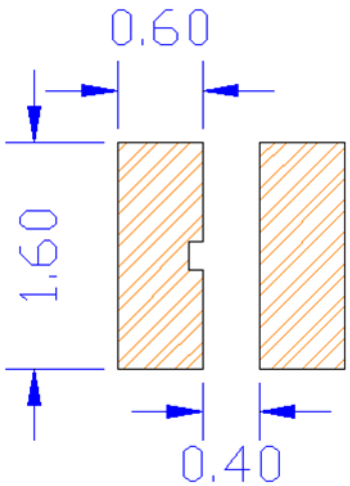

Recommended Solder Pad

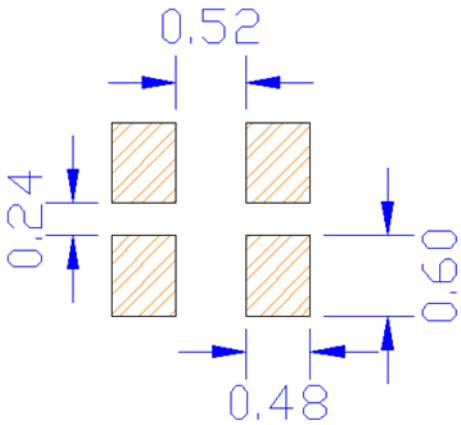

Recommended Stencil Pattern
(Hatched Area is opening)

Note:

1. Dimensions are in millimeters. ± 0.13
2. Measurement tolerances： ±0.1

TAPE AND REEL

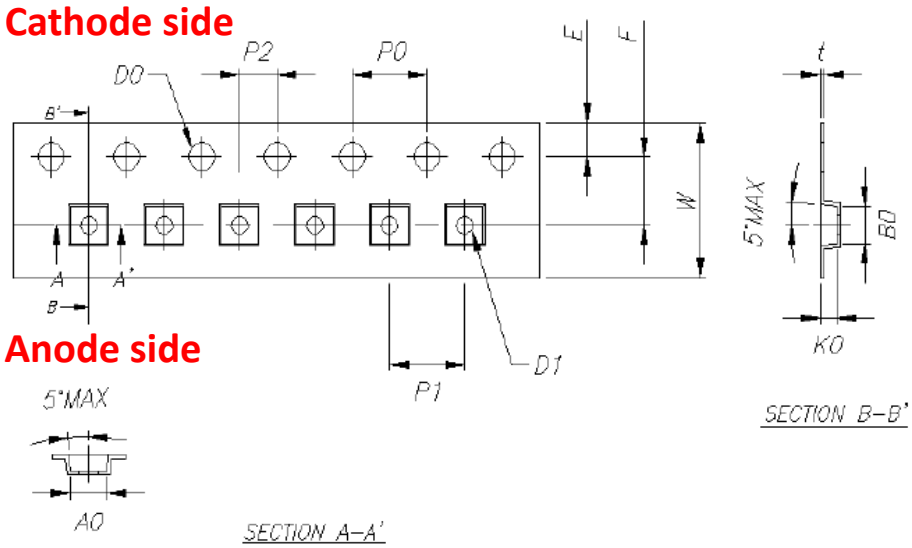

Item	Specification	Tol. (+/-)
W	**8.00**	± 0.20
E	**1.75**	± 0.10
F	**3.50**	± 0.05
D0	**1.50**	+0.10, -0
D1	**1.00**	± 0.10
P0	**4.00**	± 0.10
P1	**4.00**	± 0.10
P2	**2.00**	± 0.10
P0 x 10	**40.00**	± 0.20

t	**0.20**	± 0.05
A0	**2.00**	± 0.10
B0	**2.00**	± 0.10
K0	**0.90**	± 0.10

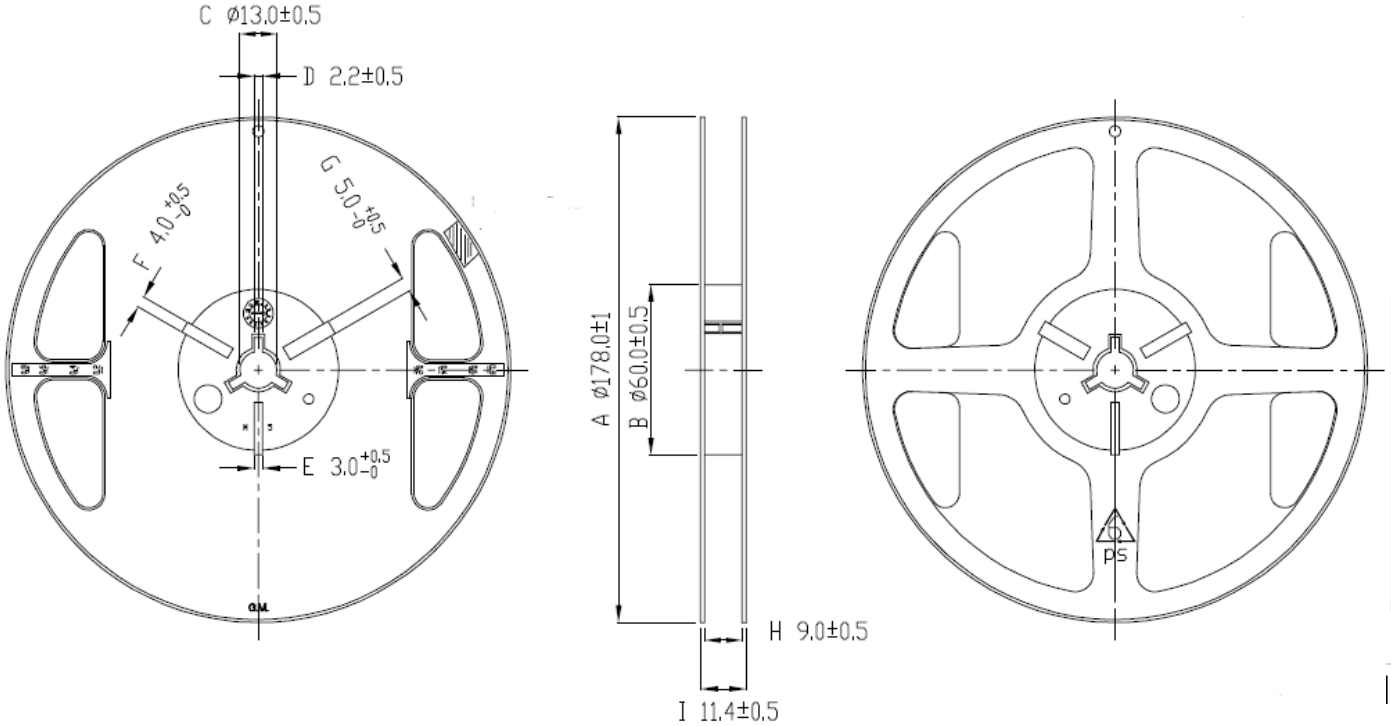

Note:

- Dimension unit: millimeter.

PACKING

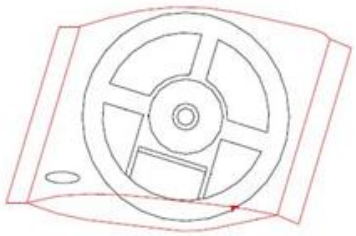

1 Anti-Static Reel in 1 Moistureproof Foil Bag.

(Within Moisture Absorbent Material)

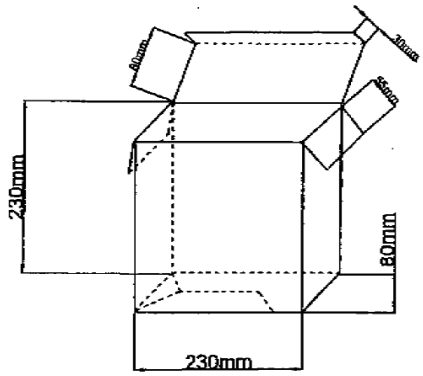

4 Moistureproof Foil Bags in Box.

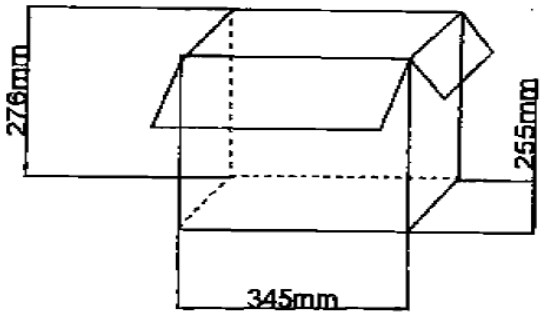

20 Moistureproof Foil Bags in Box.

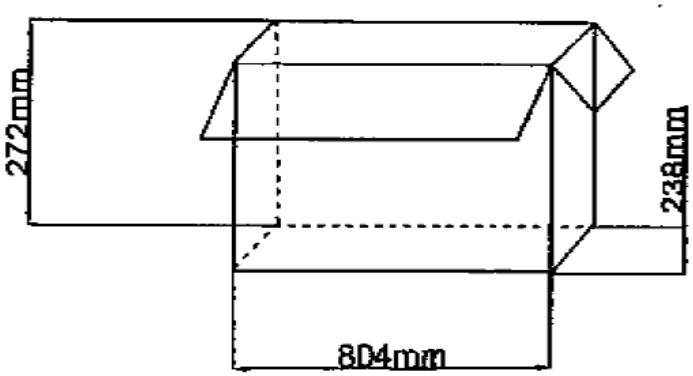

50 Moistureproof Foil Bags in Box.

CAUTIONS

1. Moisture Sensitivity

In testing, GPI has found CA18-9X2 LEDs to have 1 year floor life in condition <=30C/ 60% relative humidity (RH). Moisture testing included a 168-hr soak at 85C/60% RH followed by 3 times reflow cycles, with visual and electrical inspections at each stage.

GPI recommends keeping CA18-9X2 LEDs in their sealed moisture-barrier packaging until immediately prior to use. GPI also recommends returning any unusual LEDs to the re-sealable moisture-barrier bag and closing the bag immediately after use.

2. Handling Precautions

Do not handle LEDs with bare hands, it may contaminate the LED surface and affect optical characteristics. In the worst case, catastrophic failure from excess pressure through wire-bond breaks and package damage may result.

Do not stack assembled PCBs together. Failure to comply can cause the resin portion of the product to be cut, chipped, delaminated and/or deformed. It may cause wire to break, leading to catastrophic failures.

3. Eye safety

Warning: do not look at exposed lamp in operation. Eye injury can result.

4. Static Electricity

Wristbands and anti-electrostatic gloves are strongly recommended and all devices, equipment and machinery must be properly grounded when handling the LEDs, which are sensitive against static electricity and surge.
Precautions are to be taken against surge voltage to the equipment that mounts the LEDs.
Unusual characteristics such as significant increase of current leakage, decrease of turn-on voltage or non-operation at a low current can occur when the LED is damaged.

5. Thermal Constraints

The temperature of the package surface is strongly recommended below 200℃ in operation